Contents

1 DESCRIPTION 2
2 APPLICATION 2
3 FEATURES 2
4 PIN CONFIGURATION 3
4.1 SOP16 PACKAGE 3
4.2 QFN20 PACKAGE 4
5 BLOCK DIAGRAM 6
6 ELECTRICAL CHARACTERISTICS 6
6.1 ABSOLUTE MAXIMUM RATINGS 6
6.2 DC PARAMETERS 7
6.3 AC PARAMETERS 7
7 FUNCTION DESCRIPTION 8
7.1 RESIDUAL CURRENT PROTECTION 8
7.2 GROUND NEUTRAL FAULT PROTECTION 8
7.3 SELF-TEST 8
7.4 ONE-KEY SELF-TEST 8
7.5 CLOCK 9
8 TYPICAL APPLICATION 9
9 DIMENSIONS 10
9.1 SOP16 PACKAGE DIMENSIONS 10
9.2 QFN20 PACKAGE DIMENSIONS 11
10 WELDING INSTALLATION REQUIREMENTS 12

1 Description

The ZCC2152 is a low-power pure hardware designed controller for detecting hazardous current path to ground and grounded neutral faults with self-test function. The ZCC2152 is compliant with UL934-2018.When There is a residual current ground fault or a grounded neutral fault, the chip generates tripping signal to driver the circuit breaker to decouple the load; When there is failures of the peripheral component or GFCI module failing to response the residual current ground fault, the chip output a EOL alarm signal, which could drive the LED.
In addition, ZCC2152 integrated one-key-test function, that is, when the reset button had been pressed, the ZCC2152 perform self-test after about 2s.

2 Application

- Load Panel GFCI Breakers
- GFCI Receptacles
- In−line GFCI Circuits (power cords)

3 Features

- Hot-wire-to-ground fault detection
- Grounded Neutral fault detection
- Ideal for 120V or 240V system
- Periodic functional testing for key GFCI components: GFCI module, Solenoid, sense transformer, SCR, neutral transformer, power rectifier
- Output EOL signal if detecting faults
- Low power: supply current <500μA
- Wide temperature range: -40℃～+85℃
- Superior immunity to EM interference
- Pure hardware designed, no software embedded
- Single-chip dual die independent dual power supply design
- Simulate neutral ground fault, can be used to detect the fault of neutral coil;
- Output drive thyristor
- Comply with UL943-2018 standard
- Humidity sensitivity level: MSL3

4 Pin Configuration

4.1 SOP16 Package

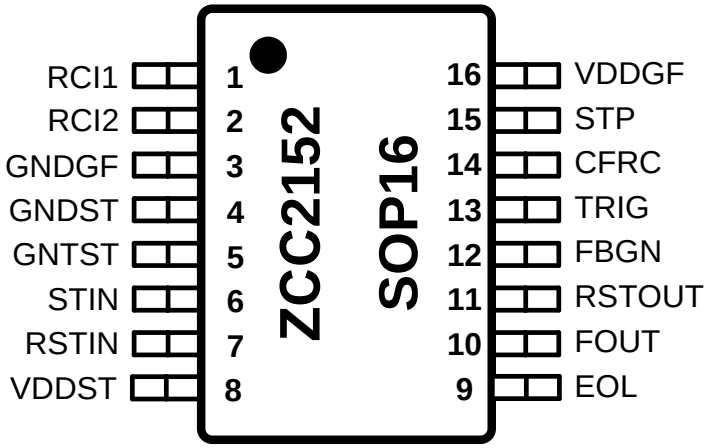

No.	Pin Name	Input/ Output	Description
1	RCI1	Input	Residual current detection input 1
2	RCI2	Input	Residual current detection input 2
3	GNDGF	Ground	Ground for GFCI module
4	GNDST	Ground	Ground for self-test module
5	GNTST	Input	Grounded neutral detection input
6	STIN	Input	Self-test input
7	RSTIN	Input	Reset button input
8	VDDST	Power	Power supply for self-test module
9	EOL	Output	End of Life output, outputs 3.75Hz signal with 50% duty cycle (driving LED)
10	FOUT	Output	Fault-test output for ground-fault simulation

11	RSTOUT	Output	Reset output
12	FBGN	Output	Feedback signal for grounded neutral fault detection
13	TRIG	Output	SCR drive output
14	CFRC	Output	Amp output, connected to external capacitor
15	STP	Input	Self-test indication input
16	VDDGF	Power	Power supply for GFCI controller module

4.2 QFN20 Package

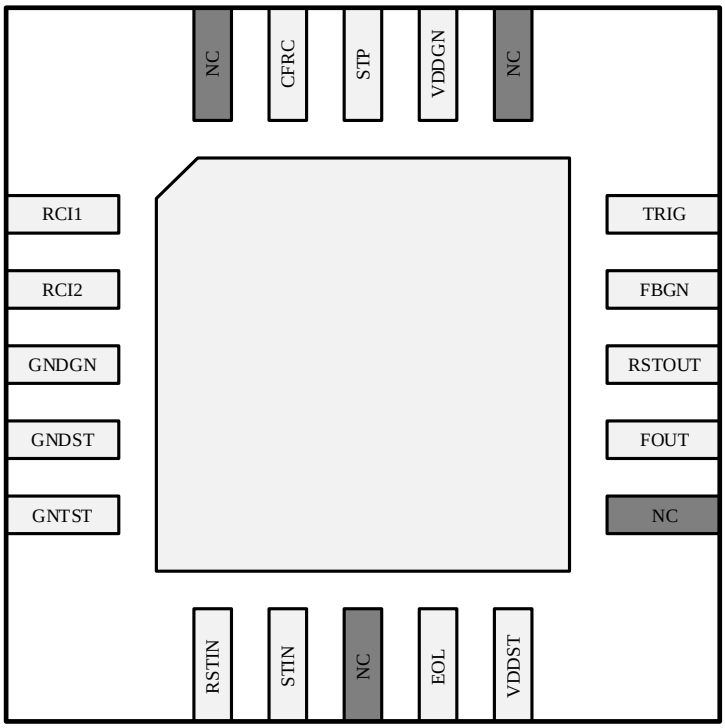

No.	Pin Name	Input/ Output	Description
1	RCI1	Input	Residual current detection input 1
2	RCI2	Input	Residual current detection input 2
3	GNDGN	Ground	Ground for GFCI module

No.	Pin Name	Input/ Output	Description
4	GNDST	Ground	Ground for self-test module
5	GNTST	Input	Grounded neutral detection input
6	RSTIN	Input	Reset button input
7	STIN	Input	Self-test input
8	NC	N/A	No Connected
9	EOL	Output	End of Life output, outputs 3.75Hz signal with 50% duty cycle (driving LED)
10	VDDST	Power	Power supply for self-test module
11	NC	N/A	No Connected
12	FOUT	Output	Fault-test output for ground-fault simulation
13	RSTOUT	Output	Reset output
14	FBGN	Output	Feedback signal for grounded neutral fault detection
15	TRIG	Output	SCR drive output
16	NC	N/A	No Connected
17	VDDGN	Power	Power supply for GFCI controller module
18	STP	Input	Self-test indication input
19	CFRC	Output	Amp output, connected to external capacitor
20	NC	N/A	No Connected

5 Block Diagram

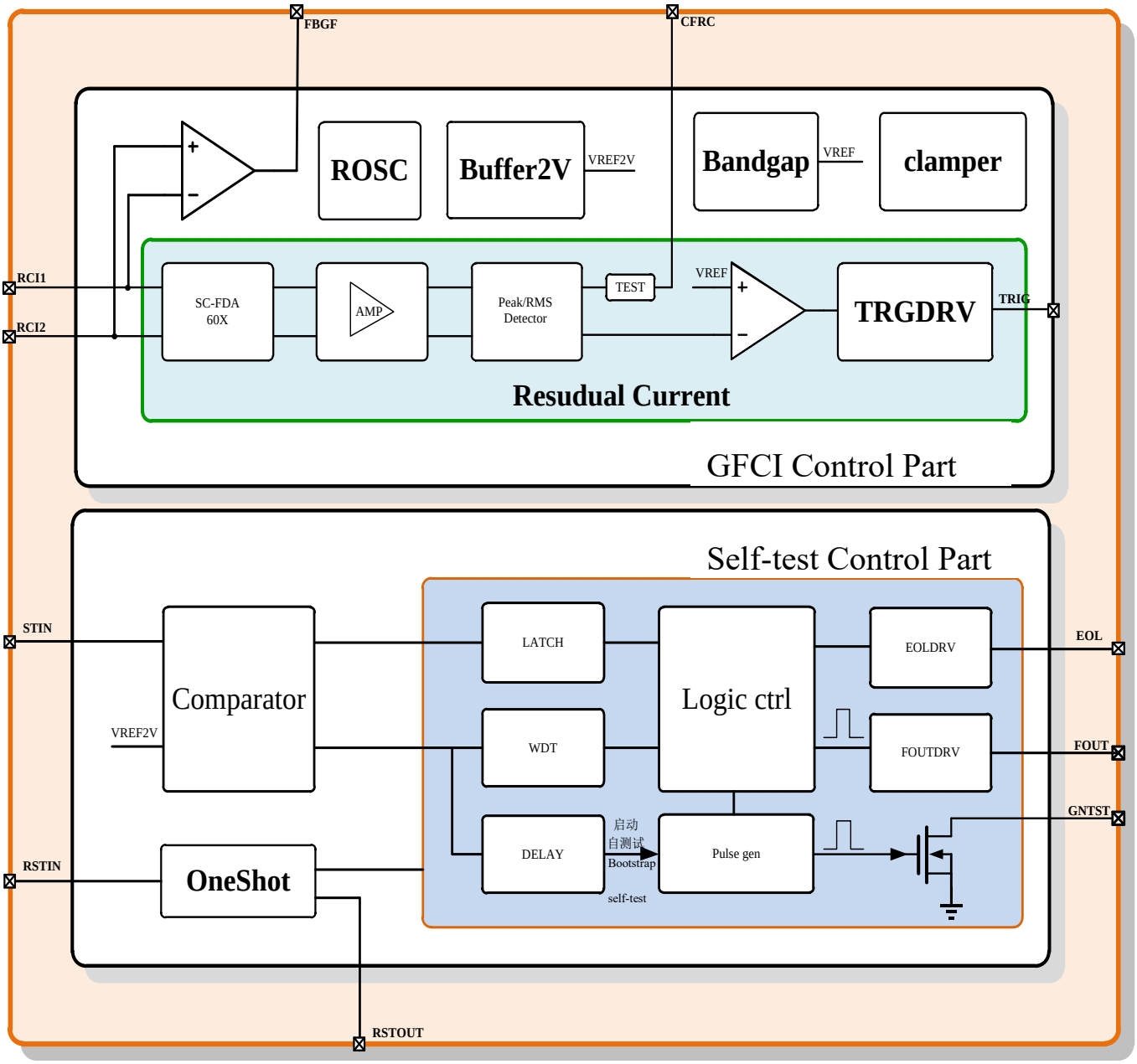

6 Electrical Characteristics

6.1 Absolute Maximum Ratings

Name	symbol	Min	Typ.	Max.	Unit
Operating Temperature Range	TOP	-40		85	℃
Storage Temperature Range	TSTG	-55		150	℃
Input Voltage Range	Vin	3.5		5.1	V
Operating Current		--		8	mA
ESD Capability, HBM	ESD_{HBM}	2			kV
ESD Capability, CDM	ESD_{CDM}	0.5			kV

6.2 DC Parameters

Name	Symbol	Test condition	Min	Typ.	Max.	Unit
Power supply	VDDGN	VDDGN sink current 3mA, RT	4.5	4.8	5	V
Quiescent current	IDD1	VDD=4.5V，trig=0, RT	260		550	uA
Trip threshold	VTRC	VDDGN sink current 3mA, RT	4.5		5.6	mV
		VDDGN sink current 3mA，test mode1, -40℃~85℃	4.3		5.8	mV
TRIG output current	ITRG	VDDGN sink current 3mA, TRG connected to 10KΩ pull down resistor, RT	200		500	uA
EOL output current	IEOL	VDDGN sink current 3mA, RT	0.4		2.0	mA

6.3 AC Parameters

Name	Symbol	Test condition	Min.	Typ.	Max.	Unit
Trip delay time	TDRC	VDDGN sink current 3mA, RT	2.6	4.0	5.4	ms
Min TRIG pulse width	TGPW	VDDGN sink current 3mA, RT	0.65	1	1.5	ms
The First self-test delay time	TST1ST	VDDGN sink current 3mA, RT	1.4	2.0	2.6	s
Self-test cycle	TSTNOM	VDDGN sink current 3mA, RT	6	11	18	min
EOL output	EOL Alarm	VDDGN sink current 3mA，fault detected	3	3.75	4.25	Hz

7 Function description

7.1 Residual current protection

When there is a residual current fault, the zero-current transformer (ZCT) induces the electrical signal, and the output voltage of the secondary coil is detected by ZCC2152. When the voltage of the secondary coil to exceed 5mV, and the duration exceeds 4ms, the output pin TRIG of ZCC2152 output a trig signal with pulse width greater than 1ms.

7.2 Ground neutral fault protection

When there is a ground neutral fault, the FBGN output signal is been coupled to RCI1 and RCI2 by sense coil and neutral coil, and the voltage of CFRC is charged, which will make the TRIG to generate a pulse signal with pulse width greater than 1ms.

7.3 Self-test

ZCC2152 periodically detects the working status of peripheral components and the GFCI module in the chip. When the components failure is detected or ground fault protection function is failed, ZCC2152 generate EOL alarm signal.

At the power on of the VDDST, ZCC2152 perform a self-test after about 2s. when doing a self-test, ZCC2152 make sense coil and neutral coil to form a transformer, by that, the oscillating signal of FBGN has been coupled to RCI1 and RCI2, which make CFRC been pulled-up, and TRIG outputs a trig pulse. During the self-test, STIN pin has been pull-up to high voltage. If everything is working properly, the voltage of STIN will been pull-down by SCR. If the voltage of STIN fail to been pulled-down four time continuously, ZCC2152 generates a EOL alarm signal. The output of EOL alarm signal is 3.75Hz square wave signal, and the output driving current is about 1.5mA.

After the first self-test passed at the power on, ZCC2152 perform self-test operation each about 11minutes.

7.4 One-key self-test

ZCC2152 provides the one-key self-test function, and can realize the function of the self-test by using

the external button switch. ZCC2152 monitors the falling edge of the RSTIN pin with an internal pull-down resistor. When the button is being pressed and released, which make a voltage pulse to RSTIN, and as a response, ZCC2152 perform a self-test operation after about 2s.

7.5 Clock

ZCC2152 generates clock signal by internal RC relaxation oscillator, no crystal oscillator is required in the application. The frequency of clock is 20KHz typically. The clock is used for all kind of delay time counting.

8 Typical Application

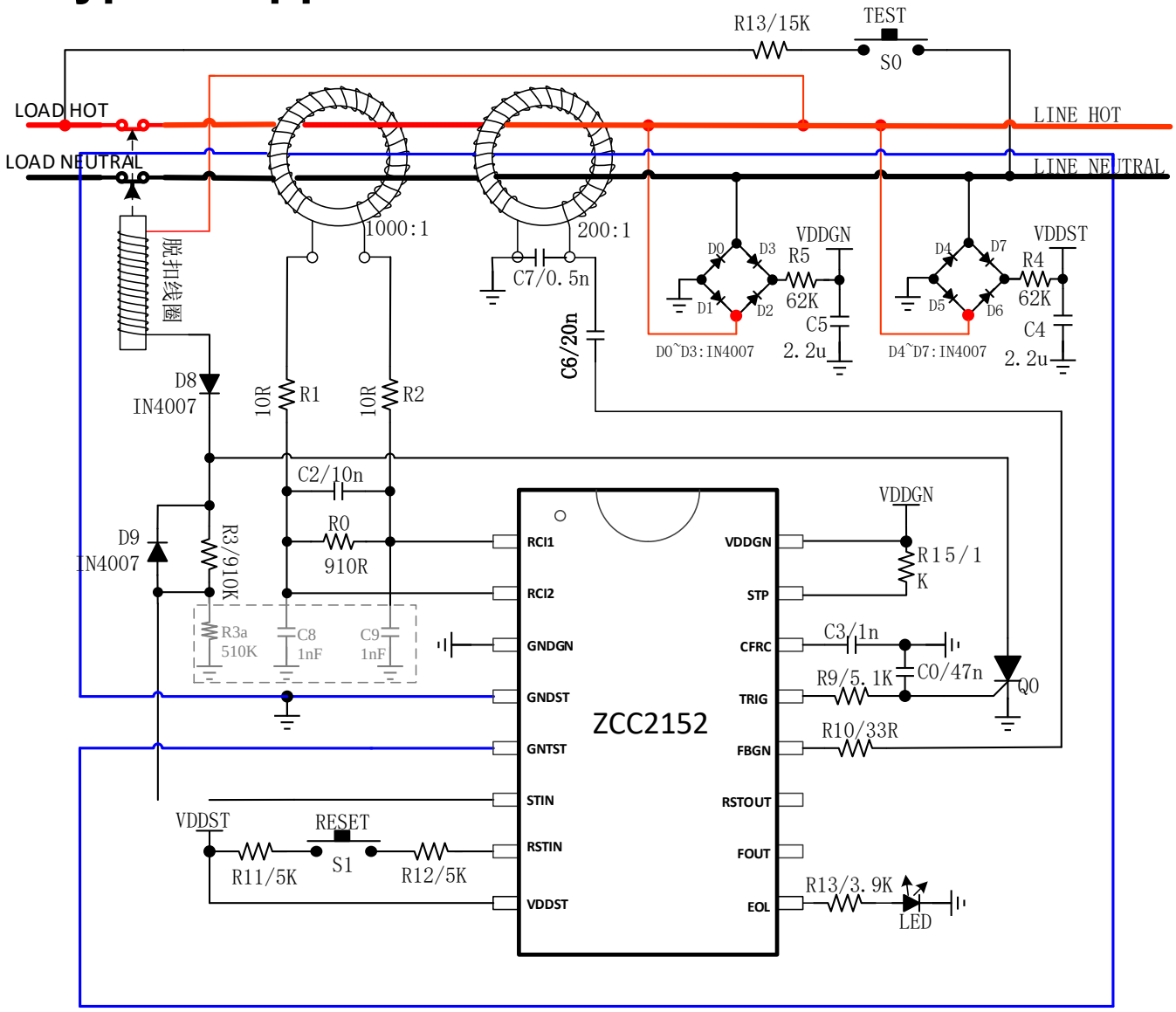

9 Dimensions

9.1 SOP16 package dimensions

Units:mm

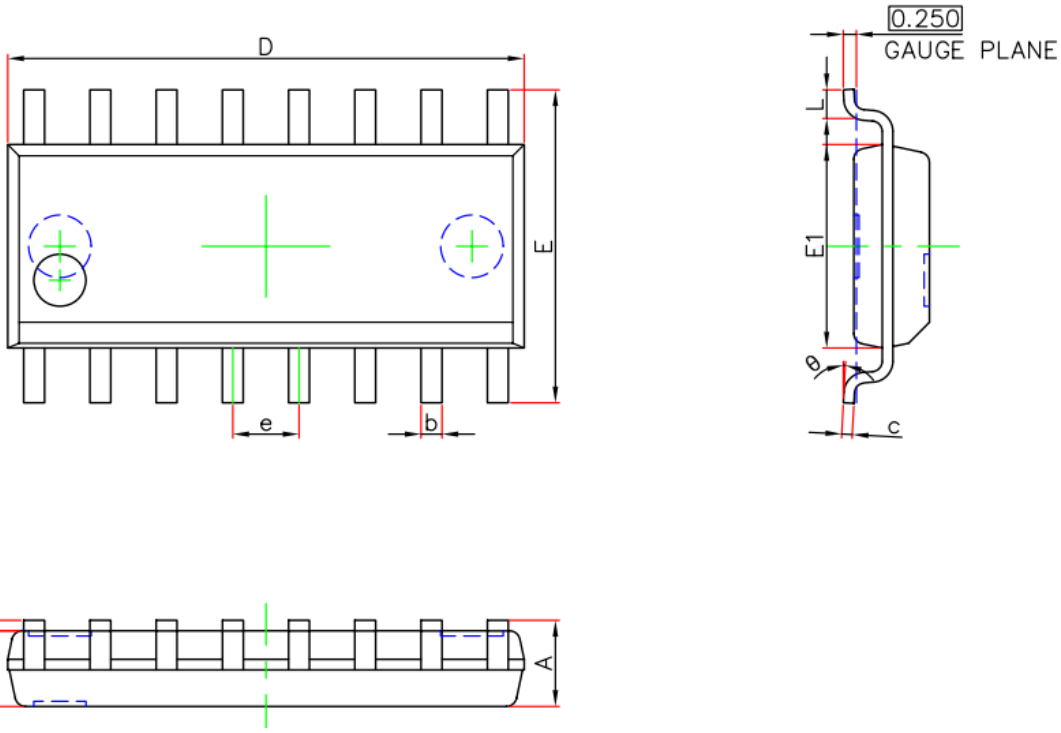

Symbol	Dimensions In Millimeters		Dimensions In Inches	
	Min.	Max.	Min.	Max.
A	——	1.750	——	0.069
A1	0.150	0.250	0.006	0.010
A2	1.400	1.500	0.055	0.059
b	0.330	0.510	0.013	0.020
c	0.170	0.250	0.007	0.010
D	9.800	10.000	0.386	0.394
e	1.270(BSC)		0.050(BSC)	
E	5.900	6.100	0.232	0.240
E1	3.800	4.000	0.150	0.157
L	0.400	1.270	0.016	0.050
θ	0°	8°	0°	8°

9.2 QFN20 package dimensions

Units:mm

QFNWB4×4-20L(P0.50T0.75/0.85) PACKAGE OUTLINE DIMENSIONS

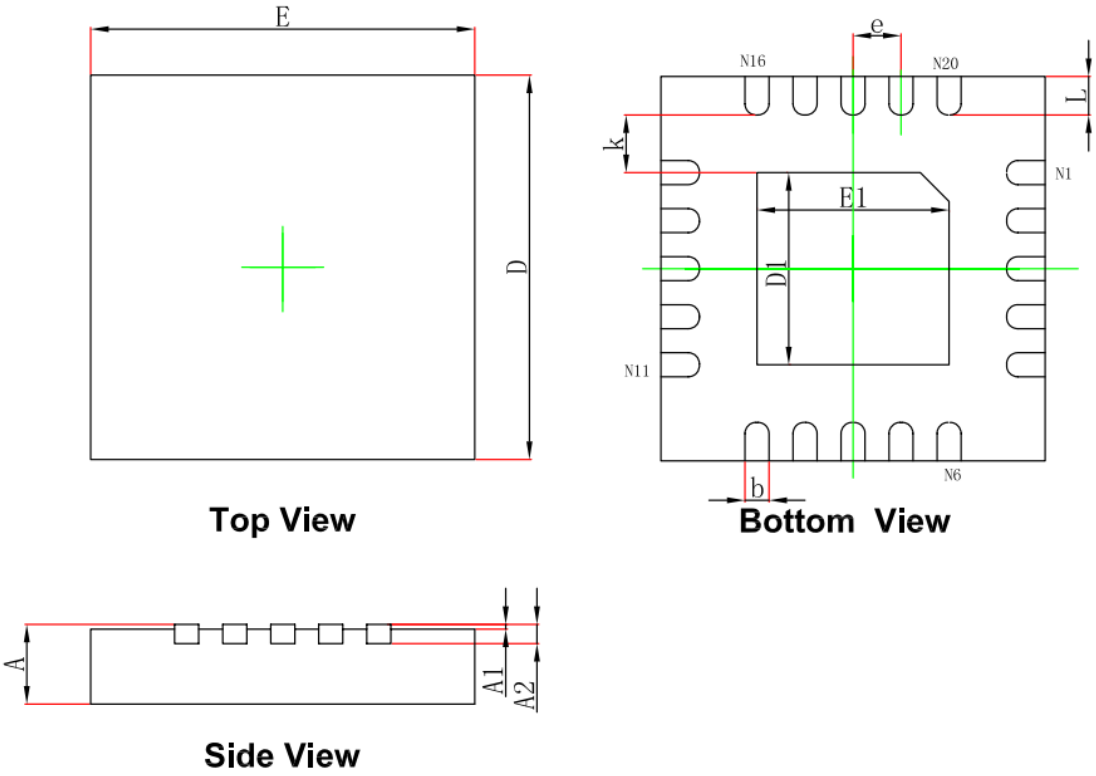

Symbol	Dimensions In Millimeters		Dimensions In Inches	
	Min.	Max.	Min.	Max.
A	0.700/0.800	0.800/0.900	0.028/0.031	0.031/0.035
A1	0.000	0.050	0.000	0.002
A2	0.153	0.253	0.006	0.010
D	3.900	4.100	0.154	0.161
E	3.900	4.100	0.154	0.161
D1	1.900	2.100	0.075	0.083
E1	1.900	2.100	0.075	0.083
k	0.200MIN.		0.008MIN.	
b	0.180	0.300	0.007	0.012
e	0.500TYP.		0.020TYP.	
L	0.350	0.450	0.014	0.018

10 Welding Installation Requirements

The ZCC2152 is available in two packages, SOP16 and QFN20. According to JEDEC standard J-STD-020, the peak temperature of lead-free process reflow soldering in both package forms is 260℃. For welding curve settings, please refer to the Instructions for temperature curve setting for Reflow for Lead-free process in JEDEC standard J-STD-020.

Special statement:
Before the chip is welded to the upper plate, please observe whether the humidity card is discolored to confirm that the humidity sensitive package is intact. If there is no special instructions, the chip package is MSL3 grade, please open the package and put in a non-dry environment for one week, welding operation

- Do not reflow more than three times unless otherwise specified

Profile Feature	Pb-Free Assembly
Preheat/Soak Temperature Min (T_{smin}) Temperature Max (T_{smax}) Time (t_s) from (T_{smin} to T_{smax})	 150 °C 200 °C 60-120 seconds
Ramp-up rate (T_L to T_p)	3 °C/second max.
Liquidous temperature (T_L) Time (t_L) maintained above T_L	217 °C 60-150 seconds
Peak package body temperature (T_p)	For users T_p must not exceed the Classification temp in Table 4-2. For suppliers T_p must equal or exceed the Classification temp in Table 4-2.
Time (t_p)* within 5 °C of the specified classification temperature (T_c), see Figure 5-1.	30* seconds
Ramp-down rate (T_p to T_L)	6 °C/second max.
Time 25 °C to peak temperature	8 minutes max.

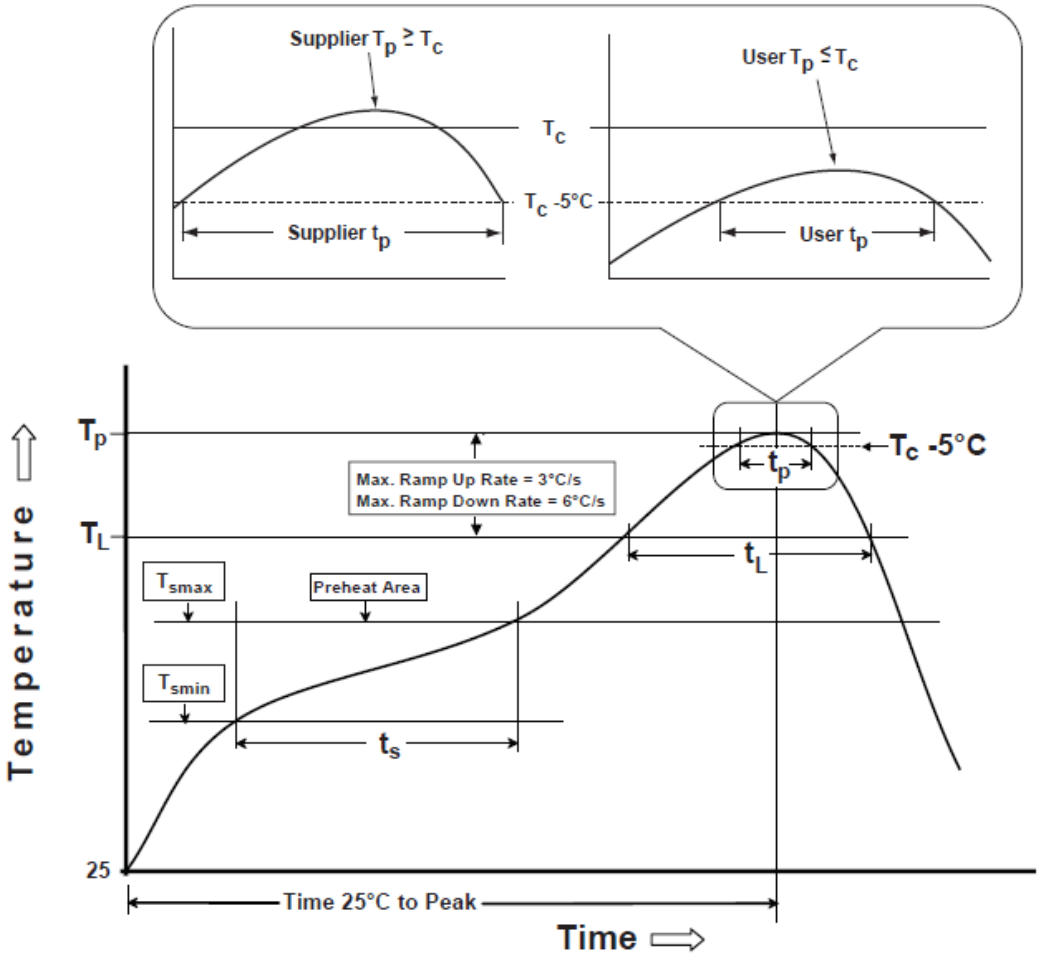

Figure 1: EDEC standard heat resistant reflux temperature curve