Auto-Polarity, Ultralow Voltage Step-Up Converter and Power Manager

FEATURES

- **Operates from Inputs as Low as ±30mV**
- **Less Than ±1°C Needed Across TEG to Harvest Energy**
- **Proprietary Auto-Polarity Architecture**
- **Complete Energy Harvesting Power Management System**
  - **Selectable V_{OUT} of 2.35V, 3.3V, 4.1V or 5V**
  - **2.2V, 5mA LDO**
  - **Logic-Controlled Output**
  - **Energy Storage Capability for Operation During Power Interruption**
- **Power Good Indicator**
- Uses Compact Step-up Transformers
- Small, 20-lead (4mm × 4mm) QFN Package or 20-Lead SSOP

APPLICATIONS

- Remote Sensor and Radio
- Power HVAC Systems
- Automatic Metering
- Building Automation
- Predictive Maintenance
- Industrial Wireless Sensing

DESCRIPTION

The ZCC3109 is a highly integrated DC/DC converter ideal for harvesting surplus energy from extremely low input voltage sources such as TEGs (thermoelectric genera-tors) and thermopiles. Its unique, proprietary autopolarity topology* allows it to operate from input voltages as low as 30mV, regardless of polarity.

Using two compact step-up transformers and external energy storage elements, the ZCC3109 provides a complete power management solution for wireless sensing and data acquisition. The 2.2V LDO can power an external microprocessor, while the main output can be programmed to one of four fixed voltages. The power good indicator signals that the main output is within regulation. A second output can be enabled by the host. A storage capacitor (or battery) can also be charged to provide power when the input voltage source is unavailable. Extremely low quiescent current and high efficiency maximizes the harvested energy available for the application.

The ZCC3109 is available in a small, thermally enhanced 20-lead (4mm × 4mm) QFN package and a 20-lead SSOP package.

TYPICAL APPLICATION

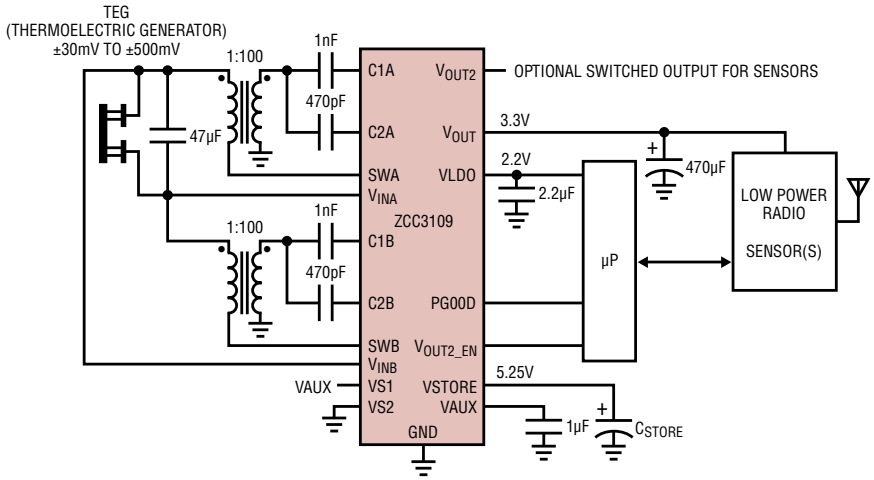

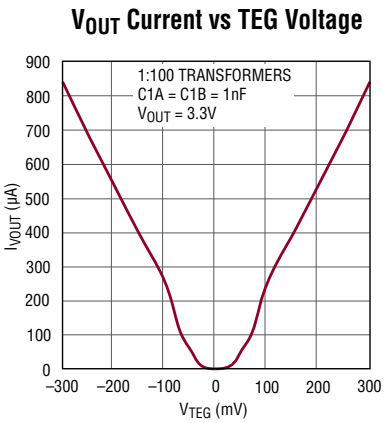

ABSOLUTE MAXIMUM RATINGS (Note 1)

SWA, SWB, V_{INA}, V_{INB} Voltage ..... –0.3V to 2V
C1A, C1B Voltage ..... –0.3V to 6V
C2A, C2B Voltage (Note 6) ..... –8V to 8V
V_{OUT2}, V_{OUT2_EN} ..... –0.3V to 6V
VS1, VS2, V_{OUT}, PGOOD ..... –0.3V to 6V
VLDO, VSTORE ..... –0.3V to 6V
VAUX ..... 15mA Into V_{AUX}
Operating Junction Temperature Range
(Note 2) ..... –40°C to 125°C
Storage Temperature Range ..... –65°C to 125°C

PIN CONFIGURATION

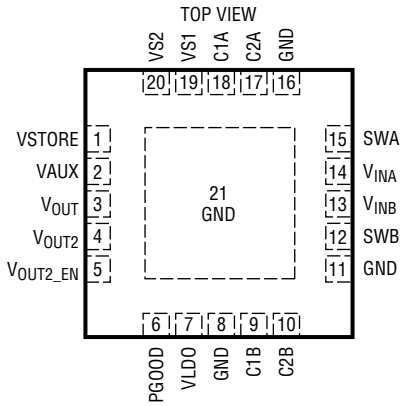

20-LEAD (4mm × 4mm) PLASTIC QFN

T_{JMAX} = 125°C, θ_{JA} = 37°C/W
EXPOSED PAD (PIN 21) IS GND (Note 5)

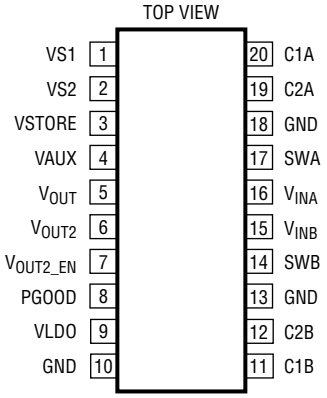

20-LEAD PLASTIC SSOP

T_{JMAX} = 125°C, θ_{JA} = 90°C/W

ORDER INFORMATION

LEAD FREE FINISH	TAPE AND REEL	PART MARKING*	PACKAGE DESCRIPTION	TEMPERATURE RANGE
ZCC3109EUF#PBF	ZCC3109EUF#TRPBF	3109	20-Lead (4mm × 4mm) Plastic QFN	–40°C to 125°C
ZCC3109IUF#PBF	ZCC3109IUF#TRPBF	3109	20-Lead (4mm × 4mm) Plastic QFN	–40°C to 125°C
ZCC3109EGN#PBF	ZCC3109EGN#TRPBF	ZCC3109GN	20-Lead Plastic SSOP	–40°C to 125°C
ZCC3109IGN#PBF	ZCC3109IGN#TRPBF	ZCC3109GN	20-Lead Plastic SSOP	–40°C to 125°C

ELECTRICAL CHARACTERISTICS

The ● denotes the specifications which apply over the full operating junction temperature range, otherwise specifications are for T_A = 25°C (Note 2). VAUX = 5V unless otherwise noted.

PARAMETER	CONDITIONS		MIN	TYP	MAX	UNITS
Minimum Start-Up Voltage	Using 1:100 Transformer Turns Ratio, VAUX = 0V			±30	±50	mV
No-Load Input Current	Using 1:100 Transformer Turns Ratios, V_{IN} = 30mV, V_{OUT2_EN} = 0V, All Outputs Charged and in Regulation			6		mA
Input Voltage Range	Using 1:100 Transformer Turns Ratios	●	$V_{STARTUP}$		±500	mV
Output Voltage	VS1 = VS2 = GND VS1 = VAUX, VS2 = GND VS1 = GND, VS2 = VAUX VS1 = VS2 = VAUX	● ● ● ●	2.30 3.234 4.018 4.875	2.350 3.300 4.100 5.000	2.40 3.366 4.182 5.10	V V V V
VAUX Quiescent Current	No Load, All Outputs Charged			7	10	µA
VAUX Clamp Voltage	Current Into VAUX = 5mA	●	5.0	5.25	5.55	V
V_{OUT} Quiescent Current	V_{OUT} = 3.3V, V_{OUT2_EN} = 0V			0.2		µA
V_{OUT} Current Limit	V_{OUT} = 0V	●	6	15	26	mA
N-Channel MOSFET On-Resistance	C2B = C2A = 5V (Note 3) Measured from V_{INA} or SWA, V_{INB} or SWB to GND			0.35		Ω
LDO Output Voltage	0.5mA Load On V_{LDO}	●	2.134	2.2	2.30	V
LDO Load Regulation	For 0mA to 2mA Load			0.5	1	%
LDO Line Regulation	For V_{AUX} from 2.5V to 5V			0.05	0.2	%
LDO Dropout Voltage	I_{LDO} = 2mA	●		100	200	mV
LDO Current Limit	V_{LDO} = 0V	●	5	12		mA
VSTORE Leakage Current	VSTORE = 5V			0.1	0.3	µA
VSTORE Current Limit	VSTORE = 0V	●	6	15	26	mA
V_{OUT2} Leakage Current	V_{OUT2} = 0V, V_{OUT2_EN} = 0V			50		nA
VS1, VS2 Threshold Voltage		●	0.4	0.85	1.2	V
VS1, VS2 Input Current	V_{S1} = V_{S2} = 5V			1	50	nA
PGOOD Threshold (Rising)	Measured Relative to the V_{OUT} Voltage			–7.5		%
PGOOD Threshold (Falling)	Measured Relative to the V_{OUT} Voltage			–9		%
PGOOD V_{OL}	Sink Current = 100µA			0.12	0.3	V
PGOOD V_{OH}	Source Current = 0		2.1	2.2	2.3	V
PGOOD Pull-Up Resistance				1		MΩ
V_{OUT2_EN} Threshold Voltage	V_{OUT2_EN} Rising	●	0.4	1.0	1.3	V
V_{OUT2_EN} Threshold Hysteresis				100		mV
V_{OUT2_EN} Pull-Down Resistance				5		MΩ
V_{OUT2} Turn-On Time				0.5		µs
V_{OUT2} Turn-Off Time	(Note 3)			0.15		µs
V_{OUT2} Current Limit	V_{OUT} = 3.3V	●	0.2	0.3	0.5	A
V_{OUT2} Current Limit Response Time	(Note 3)			350		ns
V_{OUT2} P-Channel MOSFET On-Resistance	V_{OUT} = 5V (Note 3)			1.0		Ω

Note 1: Stresses beyond those listed under Absolute Maximum Ratings may cause permanent damage to the device. Exposure to any Absolute Maximum Rating condition for extended periods may affect device reliability and lifetime.

Note 2: The ZCC3109 is tested under pulsed load conditions such that $T_J \approx T_A$. The ZCC3109E is guaranteed to meet specifications from 0°C to 85°C junction temperature. Specifications over the –40°C to 125°C operating junction temperature range are assured by design, characterization and correlation with statistical process controls. The ZCC3109I is guaranteed over the full –40°C to 125°C operating junction temperature range. Note that the maximum ambient temperature is determined by specific operating conditions in conjunction with

ELECTRICAL CHARACTERISTICS

board layout, the rated thermal package thermal resistance and other environmental factors. The junction temperature (T_J) is calculated from the ambient temperature (T_A) and power dissipation (P_D) according to the formula: $T_J = T_A + (P_D \bullet \theta_{JA}°C/W)$, where θ_{JA} is the package thermal impedance.

Note 3: Specification is guaranteed by design and not 100% tested in production.

Note 4: Current measurements are made when the output is not switching.

Note 5: Failure to solder the exposed backside of the QFN package to the PC board ground plane will result in a thermal resistance much higher than 37°C/W.

Note 6: The Absolute Maximum Rating is a DC rating. Under certain conditions in the applications shown, the peak AC voltage on the C2A and C2B pins may exceed ±8V. This behavior is normal and acceptable because the current into the pin is limited by the impedance of the coupling capacitor.

TYPICAL PERFORMANCE CHARACTERISTICS T_A = 25°C, unless otherwise noted.

I_{IN} vs V_{IN}

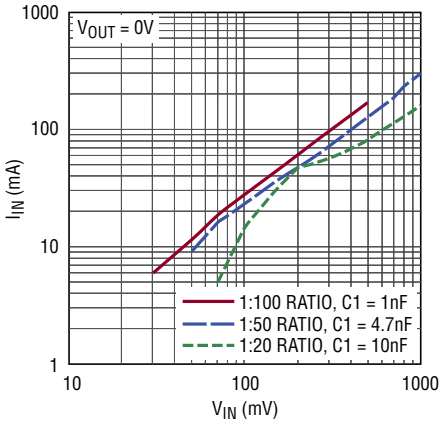

I_{VOUT} vs V_{IN}

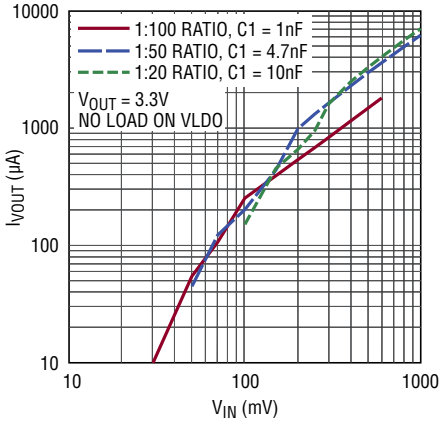

P_{VOUT} vs V_{IN}

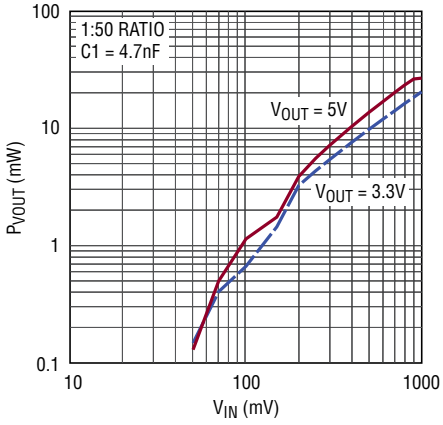

Input Resistance vs V_{IN}

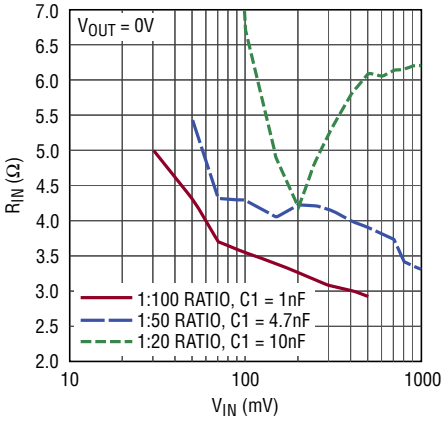

Efficiency vs V_{IN}

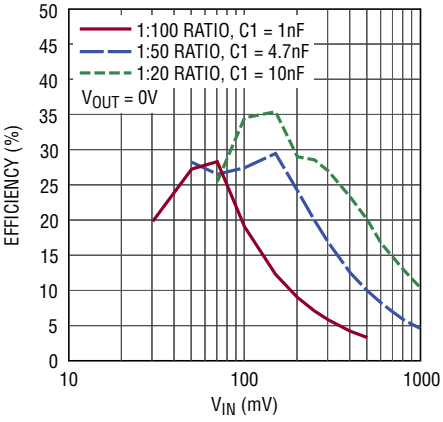

Open-Circuit Start-Up Voltage vs Source Resistance

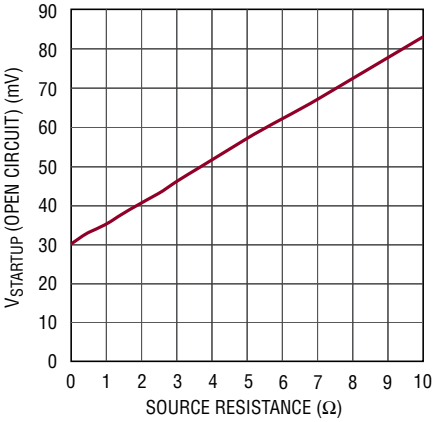

TYPICAL PERFORMANCE CHARACTERISTICS T_A = 25°C, unless otherwise noted.

V_{OUT} and VLDO vs Temperature

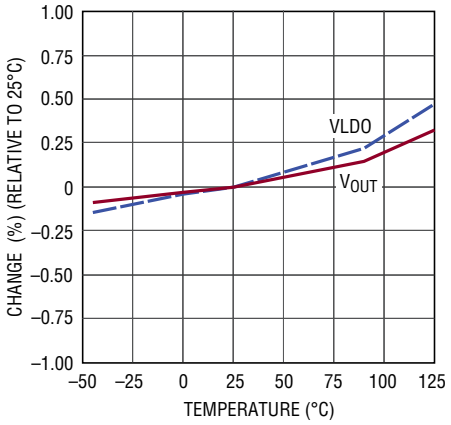

VAUX Clamp Voltage vs Shunt Current

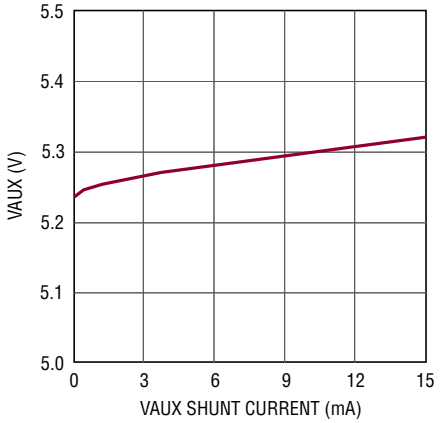

P_{VOUT} vs dT and TEG Size, 1:100 Ratio, V_{OUT} = 5V

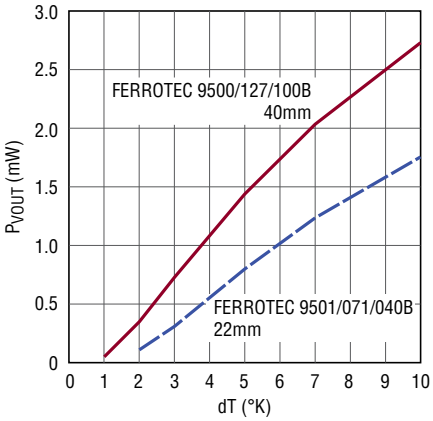

Resonant Switching Waveforms

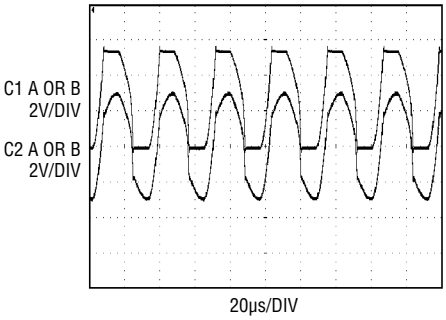

LDO Load Regulation

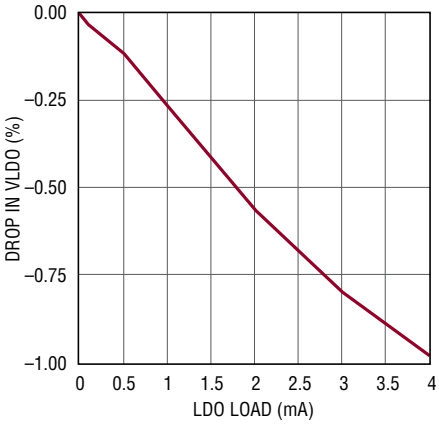

LDO Dropout Voltage

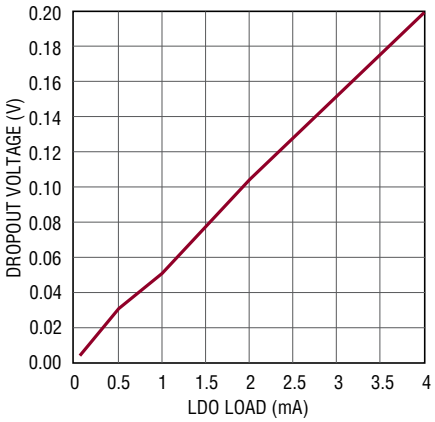

Start-Up Voltage Sequencing

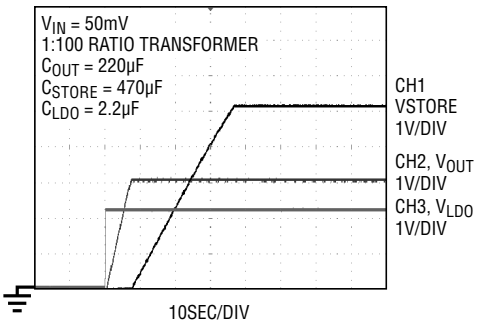

V_{OUT} and PGOOD Response During a Step Load

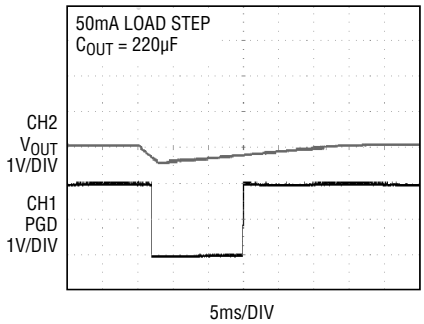

V_{OUT} Ripple

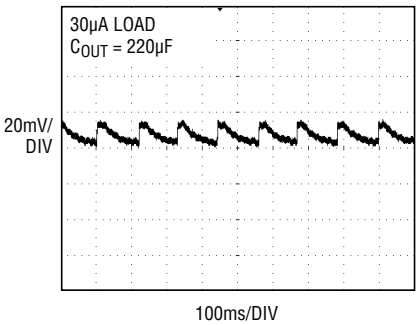

TYPICAL PERFORMANCE CHARACTERISTICS T_A = 25°C, unless otherwise noted.

LDO Step Load Response

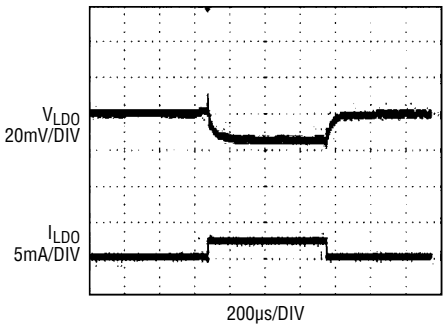

0mA TO 3mA LOAD STEP
C_{LDO} = 2.2µF

Enable Input and V_{OUT2}

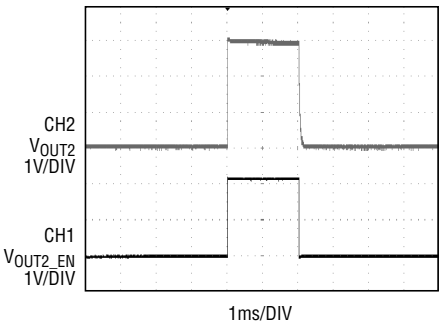

10mA LOAD ON V_{OUT2}
C_{OUT} = 220µF

Running on Storage Capacitor

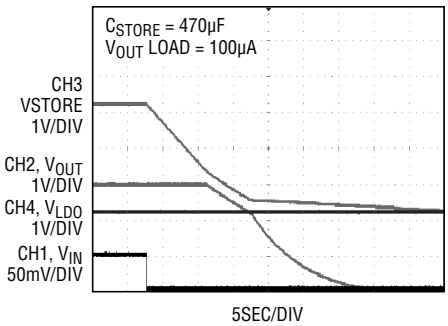

PIN FUNCTIONS (QFN/SSOP)

VSTORE (Pin 1/Pin 3): Output for the Storage Capacitor or Battery. A large storage capacitor may be connected from this pin to GND for powering the system in the event the input voltage is lost. It will be charged up to the maximum VAUX clamp voltage. If not used, this pin should be left open or tied to VAUX.

VAUX (Pin 2/Pin 4): Output of the Internal Rectifier Circuit and V_{CC} for the IC. Bypass VAUX with at least 1µF of capacitance to ground. An active shunt regulator clamps VAUX to 5.25V (typical).

V_{OUT} (Pin 3/Pin 5): Main Output of the Converter. The voltage at this pin is regulated to the voltage selected by VS1 and VS2 (see Table 1). Connect this pin to a reservoir capacitor or to a rechargeable battery. Any high current pulse loads must be fed by the reservoir capacitor on this pin.

V_{OUT2} (Pin 4/ Pin 6): Switched Output of the Converter. Connect this pin to a switched load. This output is open until V_{OUT_EN} is driven high, then it is connected to V_{OUT} through a 1Ω PMOS switch. If not used, this pin should be left open or tied to V_{OUT}.

V_{OUT2_EN} (Pin 5/Pin 7): Enable Input for V_{OUT2}. V_{OUT2} will be enabled when this pin is driven high. There is an internal 5M pull-down resistor on this pin. If not used, this pin can be left open or grounded.

PGOOD (Pin 6/Pin 8): Power Good Output. When V_{OUT} is within 7.5% of its programmed value, this pin will be pulled up to the LDO voltage through a 1M resistor. If V_{OUT} drops 9% below its programmed value PGOOD will go low. This pin can sink up to 100µA.

VLDO (Pin 7/Pin 9): Output of the 2.2V LDO. Connect a 2.2µF or larger ceramic capacitor from this pin to GND. If not used, this pin should be tied to VAUX.

GND (Pins 8, 11, 16, Exposed Pad Pin 21/Pins 10, 13, 18): Ground Pins. Connect these pins directly to the ground plane. The exposed pad serves as a ground connection and as a means of conducting heat away from the die.

VS2 (Pin 20/Pin 2): V_{OUT} Select Pin 2. Connect this pin to ground or VAUX to program the output voltage (see Table 1).

VS1 (Pin 19/Pin 1): V_{OUT} Select Pin 1. Connect this pin to ground or VAUX to program the output voltage (see Table 1).

Table 1. Regulated Output Voltage Using Pins VS1 and VS2

VS2	VS1	V_{OUT}
GND	GND	2.35V
GND	VAUX	3.3V
VAUX	GND	4.1V
VAUX	VAUX	5.0V

PIN FUNCTIONS (DFN/SSOP)

C1B (Pin 9/Pin 11): Input to the Charge Pump and Rectifier Circuit for Channel B. Connect a capacitor from this pin to the secondary winding of the "B" step-up transformer. See the Applications Information section for recommended capacitor values.

C1A (Pin 18/Pin 20): Input to the Charge Pump and Rectifier Circuit for Channel A. Connect a capacitor from this pin to the secondary winding of the "A" step-up transformer. See the Applications Information section for recommended capacitor values.

C2B (Pin 10/Pin 12): Input to the Gate Drive Circuit for SWB. Connect a capacitor from this pin to the secondary winding of the "B" step-up transformer. See the Applications Information section for recommended capacitor values.

C2A (Pin 17/Pin 19): Input to the Gate Drive Circuit for SWA. Connect a capacitor from this pin to the secondary winding of the "A" step-up transformer. See the Applications Information section for recommended capacitor values.

SWA (Pin 15/Pin 17): Connection to the Internal N-Channel Switch for Channel A. Connect this pin to the primary winding of the "A" transformer.

SWB (Pin 12/Pin 14): Connection to the Internal N-Channel Switch for Channel B. Connect this pin to the primary winding of the "B" transformer.

V_{INA} (Pin 14/Pin 16): Connection to the Internal N-Channel Switch for Channel A. Connect this pin to one side of the input voltage source (see Typical Applications).

V_{INB} (Pin 13/Pin 15): Connection to the Internal N-Channel Switch for Channel B. Connect this pin to the other side of the input voltage source (see Typical Applications).

BLOCK DIAGRAM

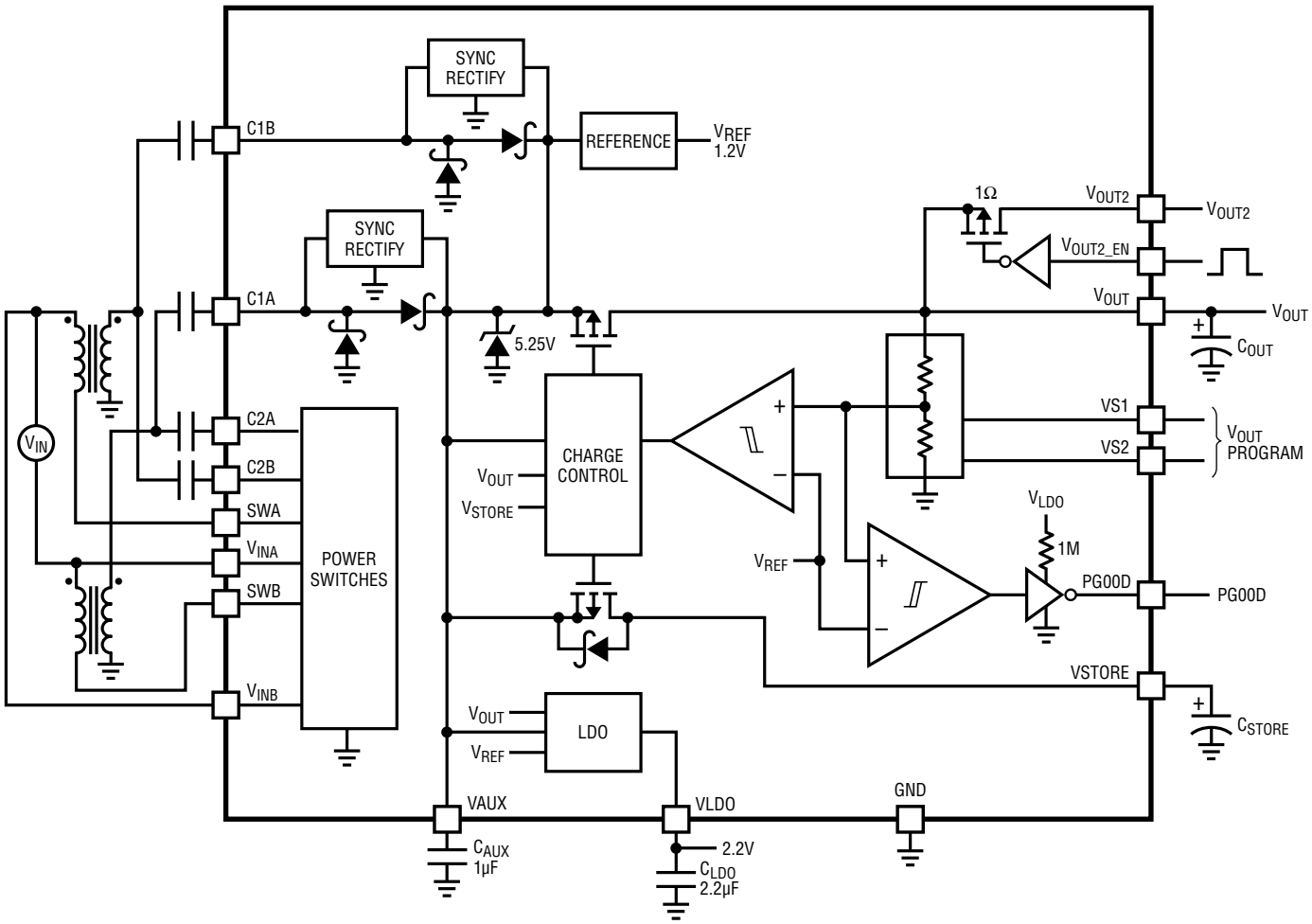

OPERATION (Refer to the Block Diagram)

The ZCC3109 is designed to use two small external step-up transformers to create an ultralow input voltage step-up DC/DC converter and power manager that can operate from input voltages of either polarity. This unique capability enables energy harvesting from thermoelectric generators (TEGs) in applications where the temperature differential across the TEG may be of either (or unknown) polarity. It can also operate from low level AC sources. It is ideally suited for low power wireless sensors and other applications in which surplus energy harvesting is used to generate system power because traditional battery power is inconvenient or impractical.

The ZCC3109 is designed to manage the charging and regulation of multiple outputs in a system in which the average power draw is very low, but where periodic pulses of higher load current may be required. This is typical of wireless sensor applications, where the quiescent power draw is extremely low most of the time, except for transmit pulses when circuitry is powered up to make measurements and transmit data.

The ZCC3109 can also be used to trickle charge a standard capacitor, super capacitor or rechargeable battery, using energy harvested from a TEG or low level AC source.

Resonant Oscillator

The ZCC3109 utilizes MOSFET switches to form a resonant step-up oscillator that can operate from an input of either polarity using external step-up transformers and small coupling capacitors. This allows it to boost input voltages as low as 30mV high enough to provide multiple regulated output voltages for powering other circuits. The frequency of oscillation is determined by the inductance of the transformer secondary winding, and is typically in the range of 10kHz to 100kHz. For input voltages as low as 30mV, transformers with a turns ratio of about 1:100 is recommended. For operation from higher input voltages, this ratio can be lower. See the Applications Information section for more information on selecting the transformers.

Charge Pump and Rectifier

The AC voltage produced on the secondary winding of the transformer is boosted and rectified using an external charge pump capacitor (from the secondary winding to pin C1A or C1B) and the rectifiers internal to the ZCC3109. The rectifier circuit feeds current into the V_{AUX} pin, provid-ing charge to the external VAUX capacitor and the other outputs.

VAUX

The active circuits within the ZCC3109 are powered from VAUX, which should be bypassed with a 1μF minimum capacitor. Once VAUX exceeds 2.5V, the main V_{OUT} is allowed to start charging.

An internal shunt regulator limits the maximum voltage on VAUX to 5.25V typical. It shunts to ground any excess current into VAUX when there is no load on the converter or the input source is generating more power than is required by the load. This current should be limited to 15mA max.

Voltage Reference

The ZCC3109 includes a precision, micropower reference, for accurate regulated output voltages. This reference becomes active as soon as VAUX exceeds 2V.

Synchronous Rectifiers

Once VAUX exceeds 2V, synchronous rectifiers in paral-lel with each of the internal rectifier diodes take over the job of rectifying the input voltage at pins C1A and C1B, improving efficiency.

Low Dropout Linear Regulator (LDO)

The ZCC3109 includes a low current LDO to provide a regulated 2.2V output for powering low power processors or other low power ICs. The LDO is powered by the higher of VAUX or V_{OUT}. This enables it to become active as soon as VAUX has charged to 2.3V, while the

OPERATION (Refer to the Block Diagram)

V_{OUT} storage capacitor is still charging. In the event of a step load on the LDO output, current can come from the main V_{OUT} reservoir capacitor. The LDO requires a 2.2µF ceramic capacitor for stability. Larger capacitor values can be used without limitation, but will increase the time it takes for all the outputs to charge up. The LDO output is current limited to 5mA minimum.

V_{OUT}

The main output voltage on V_{OUT} is charged from the VAUX supply, and is user-programmed to one of four regulated voltages using the voltage select pins VS1 and VS2, according to Table 2. Although the logic-threshold voltage for VS1 and VS2 is 0.85V typical, it is recommended that they be tied to ground or VAUX.

Table 2

VS2	VS1	V_{OUT}
GND	GND	2.35V
GND	VAUX	3.3V
VAUX	GND	4.1V
VAUX	VAUX	5V

When the output voltage drops slightly below the regulated value, the charging current will be enabled as long as VAUX is greater than 2.5V. Once V_{OUT} has reached the proper value, the charging current is turned off. The resulting ripple on V_{OUT} is typically less than 20mV peak to peak.

The internal programmable resistor divider, controlled by VS1 and VS2, sets V_{OUT}, eliminating the need for very high value external resistors that are susceptible to noise pickup and board leakages.

In a typical application, a reservoir capacitor (typically a few hundred microfarads) is connected to V_{OUT}. As soon as VAUX exceeds 2.5V, the V_{OUT} capacitor will begin to charge up to its regulated voltage. The current available to charge the capacitor will depend on the input voltage and transformer turns ratio, but is limited to about 15mA typical. Note that for very low input voltages, this current may be in the range of 1µA to 1000µA.

PGOOD

A power good comparator monitors the V_{OUT} voltage. The PGOOD pin is an open-drain output with a weak pull-up (1MΩ) to the LDO voltage. Once V_{OUT} has charged to within 7.5% of its programmed voltage, the PGOOD output will go high. If V_{OUT} drops more than 9% from its programmed voltage, PGOOD will go low. The PGOOD output is designed to drive a microprocessor or other chip I/O and is not intended to drive a higher current load such as an LED. The PGOOD pin can also be pulled low in a wire-OR configuration with other circuitry.

V_{OUT2}

V_{OUT2} is an output that can be turned on and off by the host using the V_{OUT2_EN} pin. When enabled, V_{OUT2} is connected to V_{OUT} through a 1Ω P-channel MOSFET switch. This output, controlled by a host processor, can be used to power external circuits such as sensors and amplifiers, that don't have a low power "sleep" or shutdown capability. V_{OUT2} can be used to power these circuits only when they are needed.

Minimizing the amount of decoupling capacitance on V_{OUT2} enables it to be switched on and off faster, allowing shorter pulse times and therefore smaller duty cycles in applications such as a wireless sensor/transmitter. A small V_{OUT2} capacitor will also minimize the energy that will be wasted in charging the capacitor every time V_{OUT2} is enabled.

V_{OUT2} has a current limiting circuit that limits the peak current to 0.3A typical.

The V_{OUT2} enable input has a typical threshold of 1V with 100mV of hysteresis, making it logic compatible. If V_{OUT2_EN} (which has an internal 5M pull-down resistor) is low, V_{OUT2} will be off. Driving V_{OUT2_EN} high will turn on the V_{OUT2} output.

Note that while V_{OUT2_EN} is high, the current limiting circuitry for V_{OUT2} draws an extra 8µA of quiescent current from V_{OUT}. This added current draw has a negligible effect

OPERATION (Refer to the Block Diagram)

on the application and capacitor sizing, since the load on the V_{OUT2} output, when enabled, is likely to be orders of magnitude higher than 8µA.

VSTORE

The VSTORE output can be used to charge a large storage capacitor or rechargeable battery. Once V_{OUT} has reached regulation, the VSTORE output will be allowed to charge up to the clamped VAUX voltage (5.25V typical). The storage element on VSTORE can then be used to power the system in the event that the input source is lost, or is unable to provide the current demanded by the V_{OUT}, V_{OUT2} and LDO outputs.

If VAUX drops below VSTORE, the ZCC3109 will automatically draw current from the storage element. Note that it may take a long time to charge a large storage capacitor, depending on the input energy available and the loading on V_{OUT} and VLDO.

Since the maximum charging current available at the VSTORE output is limited to about 15mA, it can safely be used to trickle charge NiCd or NiMH batteries for energy storage when the input voltage is lost.

Note that VSTORE is not intended to supply high pulse load currents to V_{OUT}. Any pulse load on V_{OUT} must be handled by the V_{OUT} reservoir capacitor.

Short-Circuit Protection

All outputs of the ZCC3109 are current limited to protect against short circuits to ground.

Output Voltage Sequencing

A timing diagram showing the typical charging and voltage sequencing of the outputs is shown in Figure 1. Note that the horizontal (time) axis is not to scale, and is used for illustration purposes to show the relative order in which the output voltages come up.

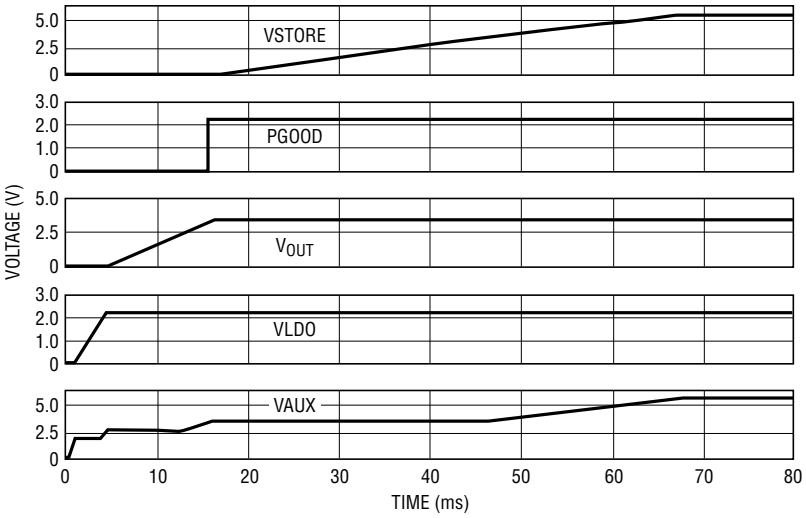

Figure 1. Output Voltage Sequencing (with V_{OUT} Programmed for 3.3V). Time Not to Scale

APPLICATIONS INFORMATION

INTRODUCTION

The ZCC3109 is designed to gather energy from very low input voltage sources and convert it to usable output voltages to power microprocessors, wireless transmitters and analog sensors. Its architecture is specifically tailored to applications where the input voltage polarity is unknown, or can change. This "auto-polarity" capability makes it ideally suited to energy harvesting applications using a TEG whose temperature differential may be of either polarity.

Applications such as wireless sensors typically require much more peak power, and at higher voltages, than the input voltage source can produce. The ZCC3109 is designed to accumulate and manage energy over a long period of time to enable short power pulses for acquiring and transmitting data. The pulses must occur at a low enough duty cycle that the total output energy during the pulse does not exceed the average source power integrated over the accumulation time between pulses. For many applications, this time between pulses could be seconds, minutes or hours.

The PGOOD signal can be used to enable a sleeping microprocessor or other circuitry when V_{OUT} reaches regulation, indicating that enough energy is available for a transmit pulse.

INPUT VOLTAGE SOURCES

The ZCC3109 can operate from a number of low input voltage sources, such as Peltier cells (thermoelectric generators), or low level AC sources. The minimum input voltage required for a given application will depend on the transformer turns ratios, the load power required, and the internal DC resistance (ESR) of the voltage source. Lower ESR sources will allow operation from lower input voltages, and provide higher output power capability.

For a given transformer turns ratio, there is a maximum recommended input voltage to avoid excessively high secondary voltages and power dissipation in the shunt regulator. It is recommended that the maximum input voltage times the turns ratio be less than 50.

Note that a low ESR decoupling capacitor may be required across a DC input source to prevent large voltage droop and ripple caused by the source's ESR and the peak primary switching current (which can reach hundreds of milliamps). Since the input voltage may be of either polarity, a ceramic capacitor is recommended.

PELTIER CELL (THERMOELECTRIC GENERATOR)

A Peltier cell is made up of a large number of series-connected P-N junctions, sandwiched between two parallel ceramic plates. Although Peltier cells are often used as coolers by applying a DC voltage to their inputs, they will also generate a DC output voltage, using the Seebeck effect, when the two plates are at different temperatures.

When used in this manner, they are referred to as thermoelectric generators (TEGs). The polarity of the output voltage will depend on the polarity of the temperature differential between the TEG plates. The magnitude of the output voltage is proportional to the magnitude of the temperature differential between the plates.

The low voltage capability of the ZCC3109 design allows it to operate from a typical TEG with temperature differentials as low as 1°C of either polarity, making it ideal for harvesting energy in applications where a temperature difference exists between two surfaces or between a surface and the ambient temperature. The internal resistance (ESR) of most TEGs is in the range of 1Ω to 5Ω, allowing for reasonable power transfer. The curves in Figure 2 show the open-circuit output voltage and maximum power transfer for a typical TEG with an ESR of 2Ω, over a 20°C range of temperature differential (of either polarity).

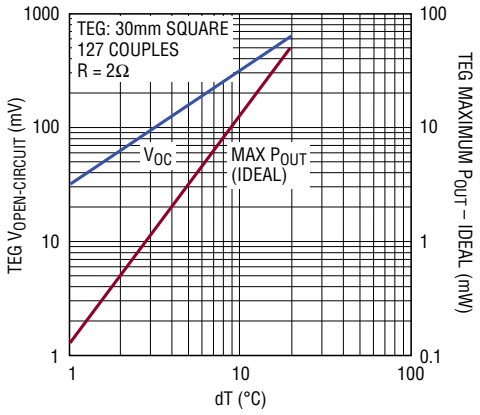

Figure 2. Typical Performance of a Peltier Cell Acting as a Power Generator (TEG)

APPLICATIONS INFORMATION

TEG LOAD MATCHING

The ZCC3109 was designed to present an input resistance (load) in the range of 2Ω to 10Ω, depending on input voltage, transformer turns ratio and the C1A and C2A capacitor values (as shown in the Typical Performance curves). For a given turns ratio, as the input voltage drops, the input resistance increases. This feature allows the ZCC3109 to optimize power transfer from sources with a few Ohms of source resistance, such as a typical TEG. Note that a lower source resistance will always provide more output current capability by providing a higher input voltage under load.

Table 3. Peltier Cell Manufacturers

CUI Inc www.cui.com
Ferrotec www.ferrotec.com/products/thermal/modules/
Fujitaka www.fujitaka.com/pub/peltier/english/thermoelectric_power.html
Hi-Z Technology www.hi-z.com
Kryotherm www.kryotherm
Laird Technologies www.lairdtech.com
Micropelt www.micropelt.com
Nextreme www.nextreme.com
TE Technology www.tetech.com/Peltier-Thermoelectric-Cooler-Modules.html
Tellurex www.tellurex.com/

UNIPOLAR APPLICATIONS

The ZCC3109 can also be configured to operate from two independent unipolar voltage sources, such as two TEGs in different locations. In this configuration, energy can be harvested from either or both sources simultaneously. See the Typical Applications for an example.

The ZCC3109 can also be configured to operate from a single unipolar source, using a single step-up transformer, by ganging its V_{IN} and SW pins together. In this manner, it can extract the most energy from very low resistance sources. See Figure 3 for an example of this configuration, along with the performance curves.

PELTIER CELL (TEG) SUPPLIERS

Peltier cells are available in a wide range of sizes and power capabilities, from less than 10mm square to over 50mm square. They are typically 2mm to 5mm in height. A list of some Peltier cell manufacturers is given in Table 3 and some recommended part numbers in Table 4.

COMPONENT SELECTION

Step-Up Transformer

The turns ratio of the step-up transformers will determine how low the input voltage can be for the converter to start. Due to the auto-polarity architecture, two identical step-up transformers should be used, unless the temperature drop across the TEG is significantly different in one polarity, in which case the ratios may be different.

Table 4. Recommended TEG Part Numbers by Size

MANUFACTURER	15mm	20mm	30mm	40mm
CUI Inc. (Distributor)	CP60133	CP60233	CP60333	CP85438
Ferrotec	9501/031/030 B	9501/071/040 B	9500/097/090 B	9500/127/100 B
Fujitaka	FPH13106NC	FPH17106NC	FPH17108AC	FPH112708AC
Kryotherm			TGM-127-1.0-0.8	LCB-127-1.4-1.15
Laird Technology			PT6.7.F2.3030.W6	PT8.12.F2.4040.TA.W6
Marlow Industries		RC3-8-01	RC6-6-01	RC12-8-01LS
Tellurex	C2-15-0405	C2-20-0409	C2-30-1505	C2-40-1509
TE Technology	TE-31-1.0-1.3	TE-31-1.4-1.15	TE-71-1.4-1.15	TE-127-1.4-1.05

APPLICATIONS INFORMATION

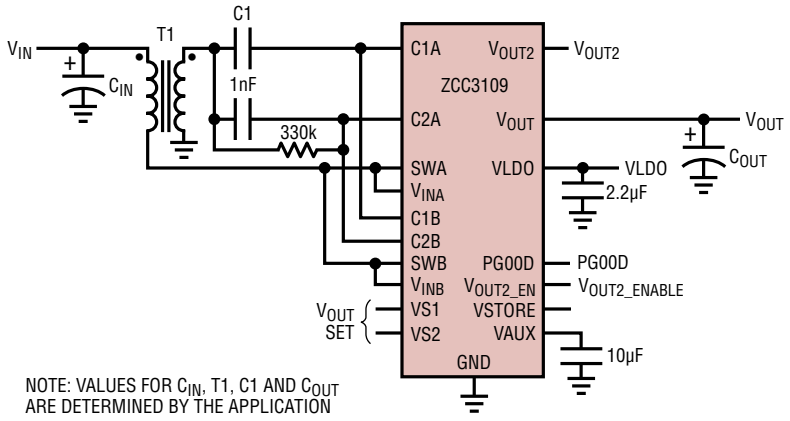

Figure 3. Unipolar Application

Typical P_{VOUT} vs dT for Unipolar Configuration

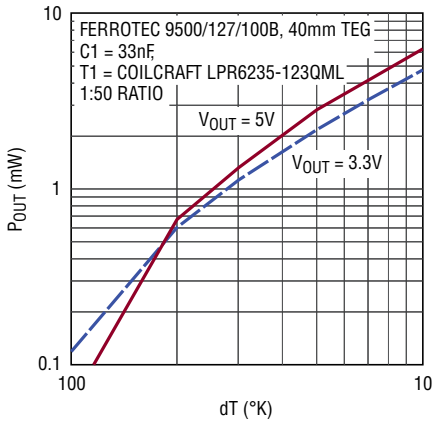

Typical I_{VOUT} vs V_{IN} for Unipolar Configuration

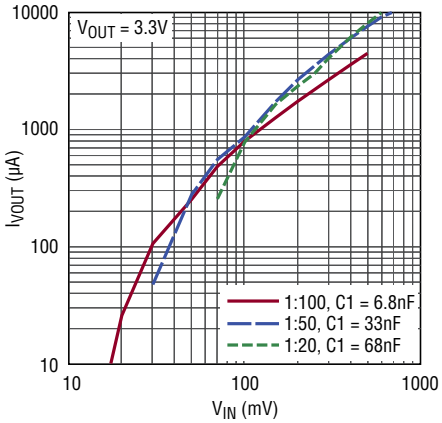

Typical Efficiency vs V_{IN} for Unipolar Configuration

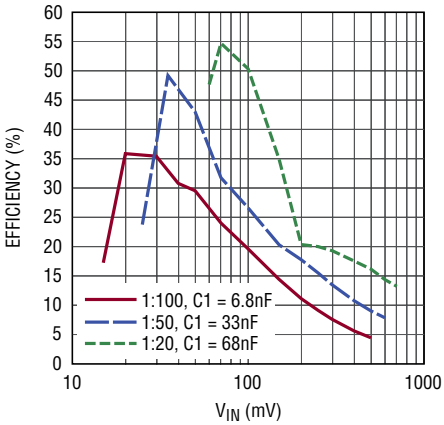

Typical Input Current vs V_{IN} for Unipolar Configuration

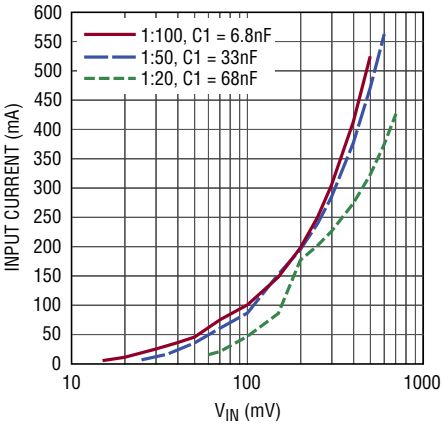

Typical R_{IN} vs V_{IN} for Unipolar Configuration

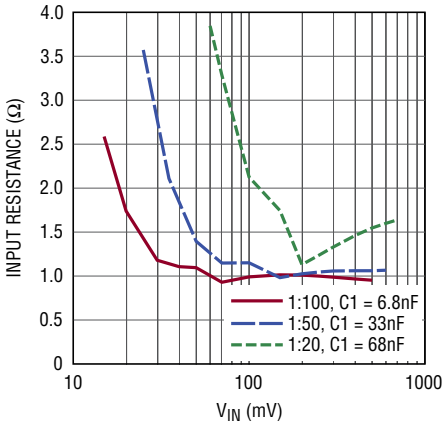

APPLICATIONS INFORMATION

Using a 1:100 primary-secondary ratio yields start-up voltages as low as 30mV. Other factors that affect performance are the resistance of the transformer windings and the inductance of the windings. Higher DC resistance will result in lower efficiency and higher start-up voltages. The secondary winding inductance will determine the resonant frequency of the oscillator, according to the formula below.

$$Freq = \frac{1}{2 \bullet \pi \bullet \sqrt{L_{SEC} \bullet C}} \text{ Hz}$$

where L_{SEC} is the inductance of one of the secondary windings and C is the load capacitance on the secondary winding. This is comprised of the input capacitance at pin C2A or C2B, typically 70pF each, in parallel with the transformer secondary winding's shunt capacitance. The recommended resonant frequency is in the range of 10kHz to 100kHz. Note that loading will also affect the resonant frequency. See Table 5 for some recommended transformers.

Table 5. Recommended Transformers

VENDOR	TYPICAL START-UP VOLTAGE	PART NUMBER
Coilcraft www.coilcraft.com	25mV 35mV 85mV	LPR6235-752SML (1:100 ratio) LPR6235-123QML (1:50 ratio) LPR6235-253PML (1:20 ratio)
Würth www.we-online	25mV 35mV 85mV	74488540070 (1:100 Ratio) 74488540120 (1:50 Ratio) 74488540250 (1:20 Ratio)

USING EXTERNAL CHARGE PUMP RECTIFIERS

The synchronous rectifiers in the ZCC3109 have been optimized for low frequency, low current operation, typical of low input voltage applications. For applications where the resonant oscillator frequency exceeds 100kHz, or a transformer turns ratio of less than 1:20 is used, or the C1A and C1B capacitor values are greater than 68nF, the use of external charge pump rectifiers (1N4148 or 1N914 or equivalent) is recommended. See the Typical Application circuits for an example. Avoid the use of Schottky rectifiers, as their low forward voltage increases the minimum start-up voltage.

C1 CAPACITOR

The charge pump capacitor that is connected from each transformer's secondary winding to the corresponding C1A and C1B pins has an effect on converter input resistance and maximum output current capability. Generally a minimum value of 1nF is recommended when operating from very low input voltages using a transformer with a ratio of 1:100. Capacitor values of 2.2nF to 10nF will provide higher output current at higher input voltages, however larger capacitor values can compromise performance when operating at low input voltage or with high resistance sources. For higher input voltages and lower turns ratios, the value of the C1 capacitor can be increased for higher output current capability. Refer to the Typical Applications examples for the recommended value for a given turns ratio.

C2 CAPACITOR

The C2 capacitors connect pins C2A and C2B to their respective transformer secondary windings. For most applications a capacitor value of 470pF is recommended. Smaller capacitor values tend to raise the minimum start-up voltage, and larger capacitor values can lower efficiency.

Note that the C1 and C2 capacitors must have a voltage rating greater than the maximum input voltage times the transformer turns ratio.

V_{OUT} AND VSTORE CAPACITOR

For pulsed load applications, the V_{OUT} capacitor should be sized to provide the necessary current when the load is pulsed on. The capacitor value required will be dictated by the load current (I_{LOAD}), the duration of the load pulse (t_{PULSE}), and the amount of V_{OUT} voltage droop the application can tolerate (ΔV_{OUT}). The capacitor must be rated for whatever voltage has been selected for V_{OUT} by VS1 and VS2:

$$C_{OUT}(\mu F) \geq \frac{I_{LOAD(mA)} \bullet t_{PULSE(ms)}}{\Delta V_{OUT}\ (V)}$$

APPLICATIONS INFORMATION

Note that there must be enough energy available from the input voltage source for V_{OUT} to recharge the capacitor during the interval between load pulses (as discussed in Design Example 1). Reducing the duty cycle of the load pulse will allow operation with less input energy.

The VSTORE capacitor may be of very large value (thousands of microfarads or even Farads), to provide energy storage at times when the input voltage is lost. Note that this capacitor can charge all the way to the VAUX clamp voltage of 5.25V typical (regardless of the settings for V_{OUT}), so be sure that the holdup capacitor has a working voltage rating of at least 5.5V at the temperature that it will be used.

The VSTORE input is not designed to provide high pulse load currents to V_{OUT}. The current path from VSTORE to V_{OUT} is limited to about 26mA max.

The VSTORE capacitor can be sized using the following formula:

$$C_{STORE} \geq \frac{(7\mu A + I_Q + I_{LDO} + (I_{PULSE} \bullet t_{PULSE} \bullet f)) \bullet t_{STORE}}{5.25 - V_{OUT}}$$

where 7µA is the quiescent current of the ZCC3109, I_Q is the load on V_{OUT} in between pulses, I_{LDO} is the load on the LDO between pulses, I_{PULSE} is the total load during the pulse, t_{PULSE} is the duration of the pulse, f is the frequency of the pulses, t_{STORE} is the total storage time required and V_{OUT} is the output voltage required. Note that for a programmed output voltage of 5V, the VSTORE capacitor cannot provide any beneficial storage time to V_{OUT}.

To minimize losses and capacitor charge time, all capacitors used for V_{OUT} and VSTORE should be low leakage. See Table 6 for recommended storage capacitors.

Table 6. Recommended Storage Capacitors

VENDOR	PART NUMBER/SERIES
AVX www.avx.com	BestCap Series TAJ and TPS Series Tantalum
Cap-XX www.cap-xx.com	GZ Series
Cooper/Bussman www.bussmann.com/3/PowerStor.html	KR Series P Series
Vishay/Sprague www.vishay.com/capacitors	Tantamount 592D 595D Tantalum

Note that storage capacitors requiring voltage balancing resistors are not recommended due to the steady-state current draw of the resistors.

PCB LAYOUT GUIDELINES

Due to the rather low switching frequency of the resonant converter and the low power levels involved, PCB layout is not as critical as with many other DC/DC converters. There are however, a number of things to consider.

Due to the very low input voltages the circuit operates from, the connections to V_{IN}, the primary of the transformers and the SW, V_{IN} and GND pins of the ZCC3109 should be designed to minimize voltage drop from stray resistance, and able to carry currents as high as 500mA. Any small voltage drop in the primary winding conduction path will lower efficiency and increase start-up voltage and capaci-tor charge time.

Also, due to the low charge currents available at the outputs of the ZCC3109, any sources of leakage current on the output voltage pins must be minimized. An example board layout is shown in Figure 4.

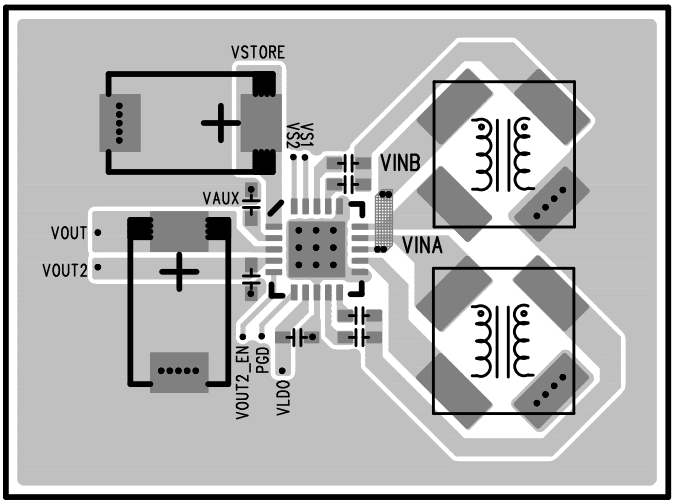

Figure 4. Example Component Placement for 2-Layer PC Board (QFN Package). Note That VSTORE and VOUT Capacitor Sizes are Application Dependent

APPLICATIONS INFORMATION

DESIGN EXAMPLE 1

This design example will explain how to calculate the necessary reservoir capacitor value for V_{OUT} in pulsed-load applications, such as a wireless sensor/transmitter. In these types of applications, the load is very small for a majority of the time (while the circuitry is in a low power sleep state), with pulses of load current occurring periodi-cally during a transmit burst.

The reservoir capacitor on V_{OUT} supports the load during the transmit pulse; the long sleep time between pulses allows the ZCC3109 to accumulate energy and recharge the capacitor (either from the input voltage source or the storage capacitor). A method for calculating the maximum rate at which the load pulses can occur for a given output current from the ZCC3109 will also be shown.

In this example, V_{OUT} is set to 3.3V, and the maximum allowed voltage droop during a transmit pulse is 10%, or 0.33V. The duration of a transmit pulse is 5ms, with a total average current requirement of 20mA during the pulse. Given these factors, the minimum required capacitance on V_{OUT} is:

$$C_{OUT}(\mu F) \geq \frac{20mA \bullet 5ms}{0.33V} = 303\mu F$$

Note that this equation neglects the effect of capacitor ESR on output voltage droop. For ceramic capacitors and low ESR tantalum capacitors, the ESR will have a negligible effect at these load currents. However, beware of the voltage coefficient of ceramic capacitors, especially those in small case sizes. This greatly reduces the effective capacitance when a DC bias is applied.

A standard value of 330µF could be used for C_{OUT} in this case. Note that the load current is the total current draw on V_{OUT}, V_{OUT2} and VLDO, since the current for all of these outputs must come from V_{OUT} during a pulse. Current contribution from the capacitor on VSTORE is not considered, since it may not be able to recharge between pulses. Also, it is assumed that the harvested charge current from the ZCC3109 is negligible compared to the magnitude of the load current during the pulse.

To calculate the maximum rate at which load pulses can occur, you must know how much charge current is available from the ZCC3109 V_{OUT} pin given the input voltage source being used. This number is best found empirically, since there are many factors affecting the efficiency of the converter. You must also know what the total load current is on V_{OUT} during the sleep state (between pulses). Note that this must include any losses, such as storage capacitor leakage.

Let's assume that the charge current available from the ZCC3109 is 150µA and the total current draw on V_{OUT} and VLDO in the sleep state is 17µA, including capacitor leakage. We'll also use the value of 330µF for the V_{OUT} capacitor. The maximum transmit rate (neglecting the duration of the transmit pulse, which is very short compared to the period) is then given by:

$$T = \frac{330\mu F \bullet 0.33V}{150\mu A - 17\mu A} = 0.82 sec \text{ or } f_{MAX} = 1.2Hz$$

Therefore, in this application example, the circuit can support a 5ms transmit pulse of 20mA every 0.82 seconds.

It can be seen that for systems that only need to transmit every few seconds (or minutes or hours), the average charge current required is extremely small, as long as the sleep or standby current is low. Even if the available charge current in the example above was only 21µA, if the sleep current was only 5µA, it could still transmit a pulse every seven seconds.

The following formula will allow you to calculate the time it will take to charge the LDO output capacitor and the V_{OUT} capacitor the first time, from zero volts. Here again, the charge current available from the ZCC3109 must be known. For this calculation, it is assumed that the LDO output capacitor is 2.2µF:

$$t_{LDO} = \frac{2.2V \bullet 2.2\mu F}{I_{CHG} - I_{LDO}}$$

If there was 150µA of charge current available and a 5µA load on the LDO (when the processor is sleeping), the time for the LDO to reach regulation would be only 33ms.

APPLICATIONS INFORMATION

The time for V_{OUT} to charge and reach regulation can be calculated by the formula below, which assumes V_{OUT} is programmed to 3.3V and C_{OUT} is 330µF:

$$t_{VOUT} = \frac{3.3V \bullet 330\mu F}{I_{CHG} - I_{VOUT} - I_{LDO}} + t_{LDO}$$

With 150µA of charge current available and 5µA of load on both V_{OUT} and VLDO, the time for V_{OUT} to reach regulation after the initial application of power would be 7.81 seconds.

DESIGN EXAMPLE 2

In most pulsed-load applications, the duration, magnitude and frequency of the load current pulses are known and fixed. In these cases, the average charge current required from the ZCC3109 to support the average load must be calculated, which can be easily done by the following:

$$I_{CHG} \geq I_Q + \frac{I_{PULSE} \bullet t_{PULSE}}{T}$$

where I_Q is the sleep current supplied by V_{OUT} and V_{LDO} to the external circuitry in-between load pulses, including output capacitor leakage, I_{PULSE} is the total load current during the pulse, t_{PULSE} is the duration of the load pulse and T is the pulse period (essentially the time between load pulses).

In this example, I_Q is 5µA, I_{PULSE} is 100mA, t_{PULSE} is 5ms and T is one hour. The average charge current required from the ZCC3109 would be:

$$I_{CHG} \geq 5\mu A + \frac{100mA \bullet 0.005sec}{3600sec} = 5.14\mu A$$

Therefore, if the ZCC3109 has an input voltage that allows it to supply a charge current greater than just 5.14µA, the application can support 100mA pulses lasting 5ms every hour. It can be seen that the sleep current of 5µA is the dominant factor in this example, because the transmit duty cycle is so small (0.00014%). Note that for a V_{OUT} of 3.3V, the average power required by this application is only 17µW (not including converter losses).

Keep in mind that the charge current available from the ZCC3109 has no effect on the sizing of the V_{OUT} capacitor, and the V_{OUT} capacitor has no effect on the maximum allowed pulse rate.

TYPICAL APPLICATIONS

Energy Harvester Operates from Small Temperature Differentials of Either Polarity

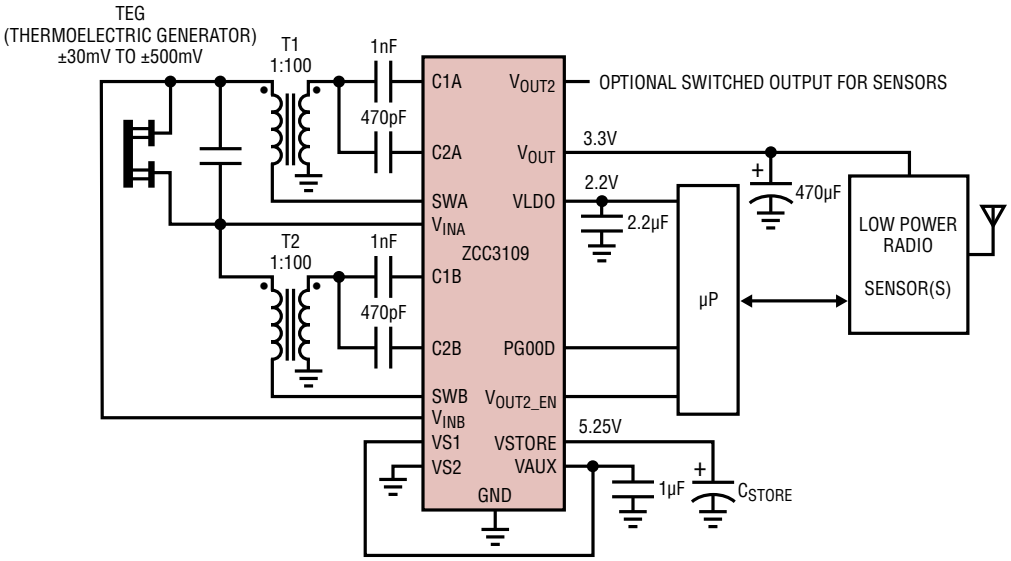

Li-Ion Battery Charger and LDO Operates from a Low Level AC Input

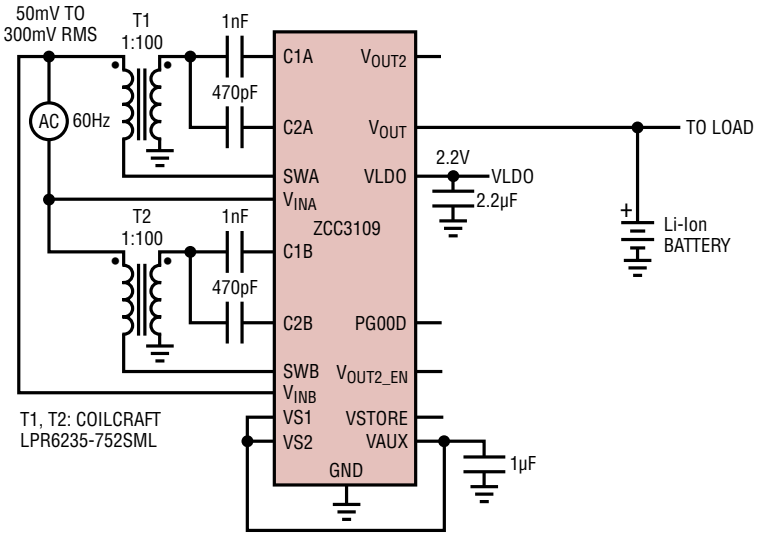

TYPICAL APPLICATIONS

Unipolar Energy Harvester Charges Battery Backup

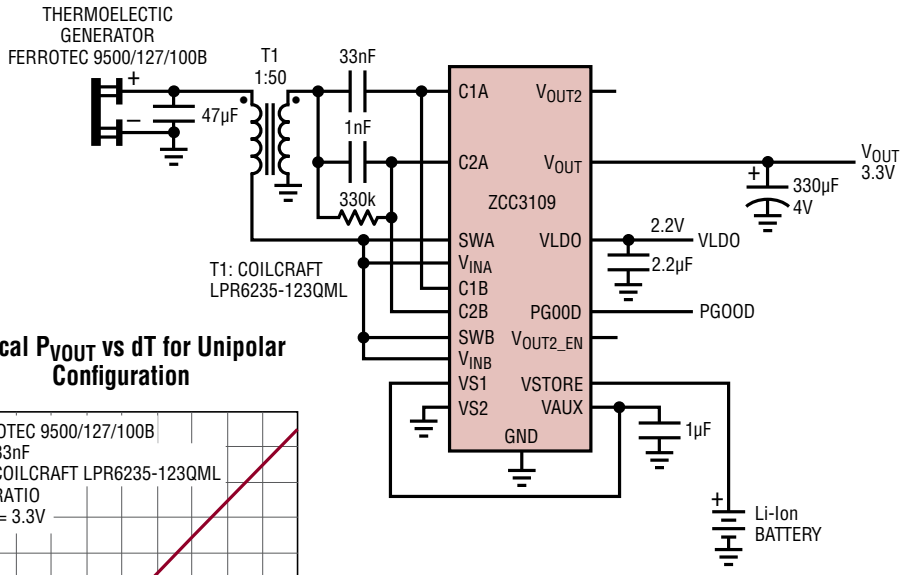

Typical P_{VOUT} vs dT for Unipolar Configuration

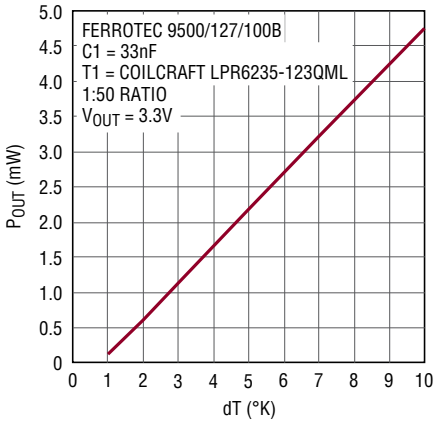

Dual-Input Energy Harvester Generates 5V and 2.2V from Either or Both TEGs, Operating at Different Temperatures of Fixed Polarity

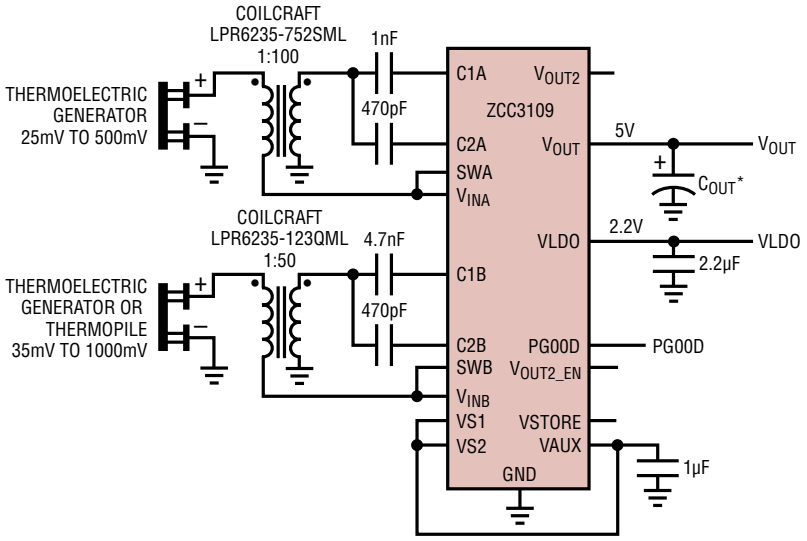

*THE VALUE OF THE C_{OUT} CAPACITOR IS DETEMINED BY THE LOAD CHARACTERISTICS

PACKAGE DESCRIPTION

20-Lead Plastic QFN (4mm × 4mm)

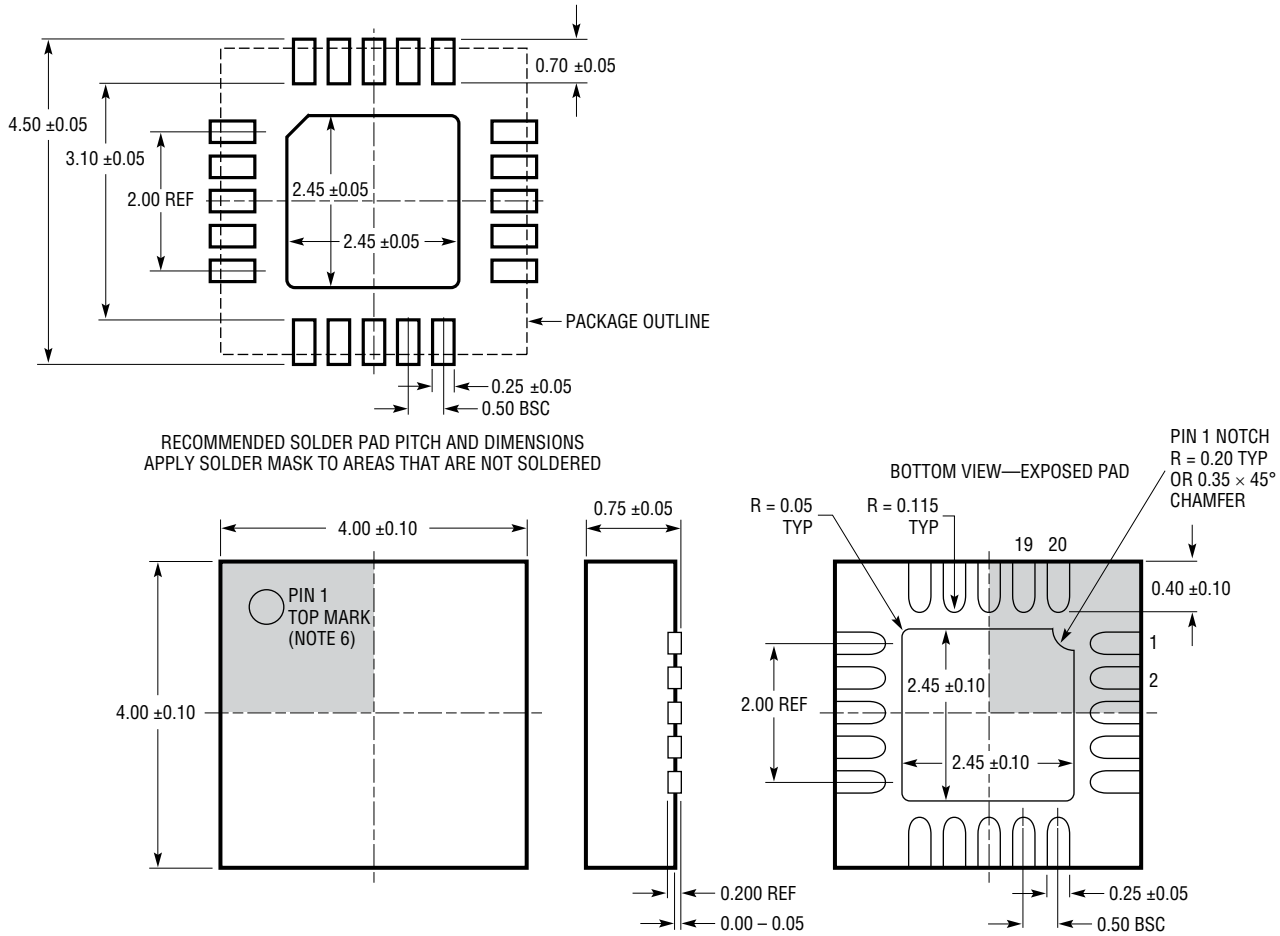

NOTE:
1. DRAWING IS PROPOSED TO BE MADE A JEDEC PACKAGE OUTLINE MO-220 VARIATION (WGGD-1)—TO BE APPROVED
2. DRAWING NOT TO SCALE
3. ALL DIMENSIONS ARE IN MILLIMETERS
4. DIMENSIONS OF EXPOSED PAD ON BOTTOM OF PACKAGE DO NOT INCLUDE MOLD FLASH. MOLD FLASH, IF PRESENT, SHALL NOT EXCEED 0.15mm ON ANY SIDE
5. EXPOSED PAD SHALL BE SOLDER PLATED
6. SHADED AREA IS ONLY A REFERENCE FOR PIN 1 LOCATION ON THE TOP AND BOTTOM OF PACKAGE

PACKAGE DESCRIPTION

20-Lead Plastic SSOP (Narrow .150 Inch)

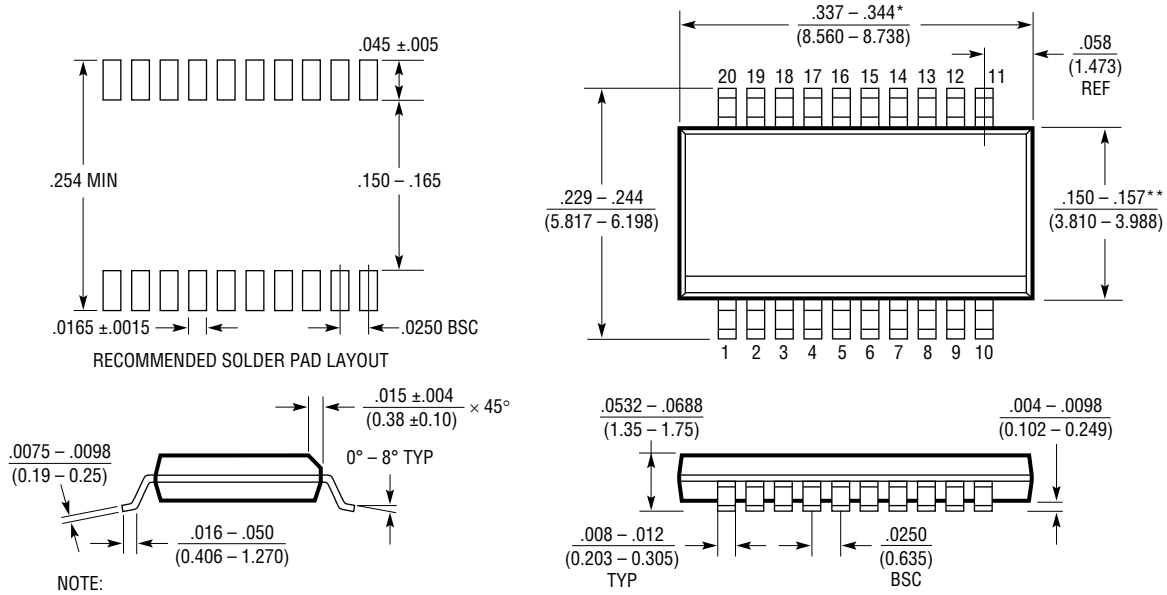

NOTE:
1. CONTROLLING DIMENSION: INCHES
2. DIMENSIONS ARE IN $\frac{\text{INCHES}}{\text{(MILLIMETERS)}}$
3. DRAWING NOT TO SCALE
4. PIN 1 CAN BE BEVEL EDGE OR A DIMPLE

*DIMENSION DOES NOT INCLUDE MOLD FLASH. MOLD FLASH SHALL NOT EXCEED 0.006" (0.152mm) PER SIDE

**DIMENSION DOES NOT INCLUDE INTERLEAD FLASH. INTERLEAD FLASH SHALL NOT EXCEED 0.010" (0.254mm) PER SIDE

TYPICAL APPLICATION

Unipolar TEG Energy Harvester for Low Resistance/High Current Inputs, Using External Charge Pump Rectifiers

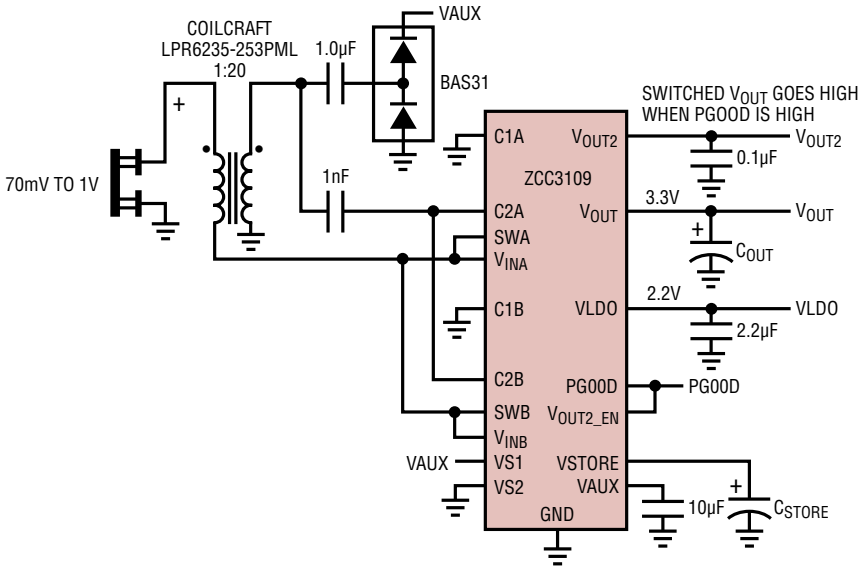

I_{VOUT} vs V_{IN}

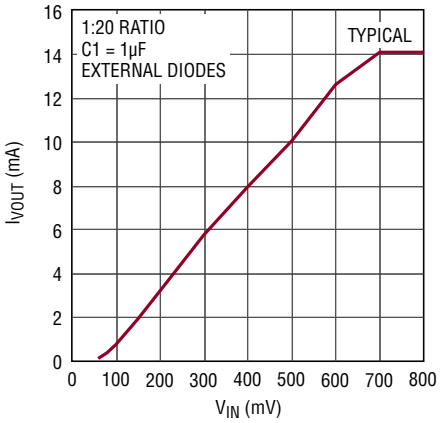
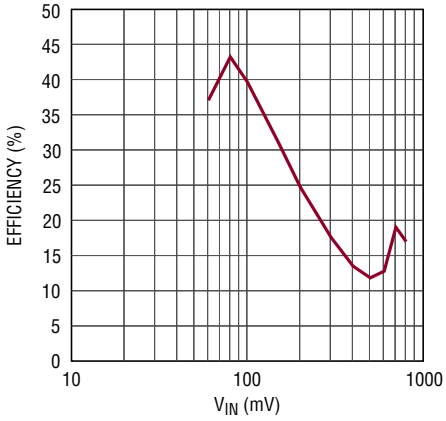
Efficiency vs V_{IN}