ZCC6505 Low-Noise 1-A Transformer Drivers for Isolated Power Supplies

1 Features

- Push-Pull Driver for transformers
- Wide Input Voltage Range: 2.25 V to 20 V
- High Output Drive: 1 A at 5 V Supply
- Low R_{ON} 0.25 Ω Max at 4.5 V Supply
- Ultra-Low EMI
- Spread Spectrum Clocking
- Precision Internal Oscillator Options: 160 kHz (ZCC6505A) and 420 kHz (ZCC6505B)
- Synchronization of Multiple Devices with External Clock Input
- Slew-Rate Control
- 1.7 A Current-Limit
- Low Shutdown Current: <1 μA
- Thermal Shutdown
- Wide Temperature Range: –55°C to 125°C
- Small 6-Pin SOT23/DBV Package
- Soft Start to reduce In-rush current

2 Applications

- Isolated Power Supply for CAN, RS-485, RS-422, RS-232, SPI, I2C, Low-Power LAN
- Low-Noise Isolated USB Supplies
- Process Control
- Telecom Supplies
- Radio Supplies
- Medical Instruments
- Distributed Supplies
- Medical Instruments
- Precision Instruments
- Low-Noise Filament Supplies

3 Description

The ZCC6505 is a low-noise, low-EMI push-pull transformer driver, specifically designed for small form factor, isolated power supplies. It drives low-profile, center-tapped transformers from a 2.25 V to 20 V DC power supply. Ultra-low noise and EMI are achieved by slew rate control of the output switch voltage and through Spread Spectrum Clocking (SSC). The ZCC6505 consists of an oscillator followed by a gate drive circuit that provides the complementary output signals to drive ground-referenced N-channel power switches. The device includes two 1-A Power-MOSFET switches to ensure start-up under heavy loads. The switching clock can also be provided externally for accurate placement of switcher harmonics, or when operating with multiple transformer drivers. The internal protection features include a 1.7A current limiting, under-voltage lockout, thermal shutdown, and break-before-make circuitry. ZCC6505 includes a soft-start feature that prevents high inrush current during power up with large load capacitors. The ZCC6505 is available in a small 6-pin SOT23/DBV package. The device operation is characterized for a temperature range from –55°C to 125°C.

Device Information(1)

PART NUMBER	PACKAGE	BODY SIZE (NOM)
ZCC6505A	SOT23 (6 Pin)	2.90 mm x 1.60 mm
ZCC6505B		

(1) For all available packages, see the orderable addendum at the end of the datasheet.

Simplified Schematic

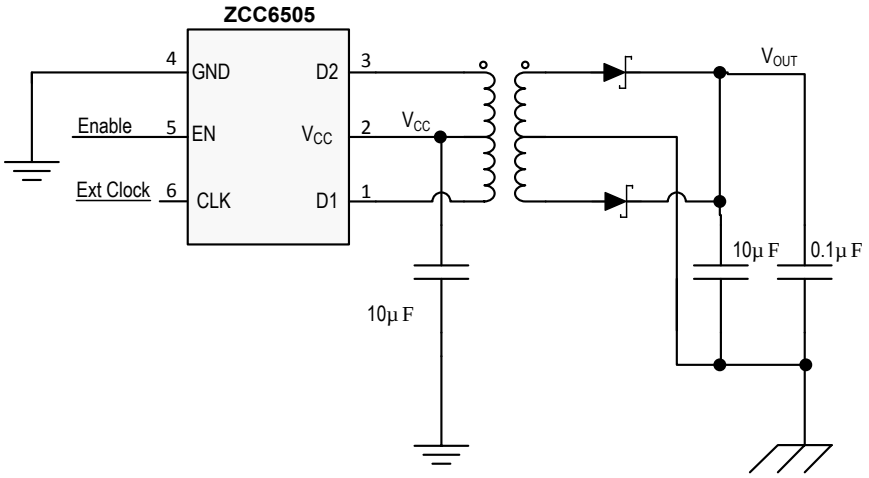

4 Pin Configuration and Functions

DBV Package
SOT-23 (6 Pin)
Top View

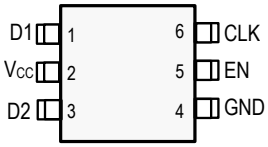

Pin Functions

PIN			DESCRIPTION
NAME	NO.	TYPE	
D1	1	O	Open drain output of the first power MOSFETs. Typically connected to the outer terminals of the center tap transformer. Because large currents flow through these pins, their external traces should be kept short.
V_{CC}	2	P	This is the device supply pin. It should be bypassed with a 4.7 μF or greater, low ESR capacitor. When $V_{CC} \leq 2.25$ V, an internal undervoltage lockout circuit trips and turns both outputs off.
D2	3	O	Open drain output of the second power MOSFETs. Typically connected to the outer terminals of the center tap transformer. Because large currents flow through these pins, their external traces should be kept short.
GND	4	P	GND is connected to the source of the power MOSFET switches via an internal sense circuit. Because large currents flow through it, the GND terminals must be connected to a low-inductance quality ground plane.
EN	5	I	The EN pin turns the device on or off. Grounding or leaving this pin floating disables all internal circuitry. If unused this pin should be tied directly to V_{CC}.
CLK	6	I	This pin is used to run the device with external clock. Internally it is pulled down to GND. If valid clock is not detected on this pin, the device shifts automatically to internal clock.

5 Specifications

5.1 Absolute Maximum Ratings

over operating free-air temperature range (unless otherwise noted)[1]. All typical values are at T_A = 25°C, V_{CC} = 5 V.

		MIN	MAX	UNIT
Supply voltage [2]	V_{CC}	–0.5	20	V
Voltage	EN, CLK	–0.5	V_{CC} + 0.5[3]	
Output switch voltage	D1, D2		39	V
Peak output switch current	$I_{(D1)Pk}$, $I_{(D2)Pk}$		2.4	A
Junction temperature, T_J		-55	150	°C
Storage temperature range, T_{stg}		–65	150	°C

(1) Stresses beyond those listed under Absolute Maximum Ratings cause permanent damage to the device. These are stress ratings only and functional operation of the device at these or any other conditions beyond those indicated under *Recommended Operating Conditions* is not implied. Exposure to absolute-maximum-rated conditions for extended periods affects device reliability.
(2) All voltage values except differential I/O bus voltages are with respect to the local ground terminal (GND) and are peak voltage values.
(3) Maximum voltage of 20V.

5.2 ESD Ratings

			VALUE	UNIT
$V_{(ESD)}$	Electrostatic discharge	Human body model (HBM), per ANSI/ESDA/JEDEC JS-001, all pins[1]	±6000	V
		Charged device model (CDM), per JEDEC specification JESD22-C101, all pins[2]	±1500	

(1) JEDEC document JEP155 states that 500-V HBM allows safe manufacturing with a standard ESD control process.
(2) JEDEC document JEP157 states that 250-V CDM allows safe manufacturing with a standard ESD control process.

5.3 Recommended Operating Conditions

			MIN	TYP	MAX	UNIT
V_{CC}	Supply voltage		2.25		20	V
I_{D1}, I_{D2}	Output switch current - Primary side	2.25 V < V_{CC} < 2.8 V			0.75	A
		2.8 V < V_{CC} < 5.5 V			1	
T_A	Ambient temperature		–55		125	°C

5.4 Thermal Information

THERMAL METRIC[1]		ZC6505 DBV (SOT-23) 6 PINS	UNIT
$R_{\theta JA}$	Junction-to-ambient thermal resistance	137.7	°C/W
$R_{\theta JC(top)}$	Junction-to-case (top) thermal resistance	57.7	°C/W
$R_{\theta JB}$	Junction-to-board thermal resistance	46.0	°C/W
ψ_{JT}	Junction-to-top characterization parameter	13.4	°C/W
ψ_{JB}	Junction-to-board characterization parameter	44.9	°C/W
$R_{\theta JC(bottom)}$	Junction-to-case(bottom) thermal resistance	N/A	°C/W

5.5 Electrical Characteristics

over full-range of recommended operating conditions, unless otherwise noted. All typical values are at T_A = 25°C, V_{CC} = 5 V.

PARAMETER		TEST CONDITIONS	MIN	TYP	MAX	UNIT
VOLTAGE SUPPLY						
$I_{(Vcc)}$	Supply Current (2.8 V < V_{CC} < 5.5)(ZCC6505A)	R_L = 50 Ω		1	1.4	mA
	Supply Current (2.8 V < V_{CC} < 5.5)(ZCC6505B)	R_L = 50 Ω		1.56	2.3	mA
I_{IH}	Leakage Current on EN and CLK pin	EN / CLK = V_{CC}		10	20	μA
I_{DIS}	V_{CC} current for EN = 0			0.1		μA
$I_{LKG(D1)}$ $I_{LKG(D2)}$	Leakage Current on D1,D2 for EN=0	Voltage of D1,D2 = V_{CC}		0.1		μA
$V_{CC+\ (UVLO)}$	Positive-going UVLO threshold				2.25	V
$V_{CC-\ (UVLO)}$	Negative-going UVLO threshold		1.7			V
$V_{HYS\ (UVLO1)}$	UVLO threshold hysteresis			0.3		V
$V_{IN(ON)}$	EN, CLK pin logic high threshold				0.7	V_{CC}
$V_{IN(OFF)}$	EN, CLK pin logic low threshold		0.3			V_{CC}
$V_{IN(HYS)}$	EN, CLK pin threshold hysteresis			0.2		V_{CC}
CLK						
F_{SW}	D1, D2 average switching Frequency (ZCC6505A)	R_L = 50 Ω to V_{CC}; Refer to Figure 36	138	160	203	Khz
	D1, D2 average switching Frequency (ZCC6505B)	R_L = 50 Ω to V_{CC}; Refer to Figure 36.	363	424	517	kHz
$F_{(EXT)}$	External clock frequency on CLK pin (ZCC6505A)		100		600	kHz
	External clock frequency on CLK pin (ZCC6505B)		100		1600	kHz
OUTPUT STAGE						
DMM	Average ON time mismatch between D1 and D2	R_L = 50 Ω		0%		
$R_{(ON)}$	Output switch on resistance	V_{CC} = 4.5 V, ID1,ID2 = 1 A		0.16	0.25	Ω
		V_{CC} = 2.8 V, ID1,ID2 = 1 A		0.19	0.31	Ω
		V_{CC} = 2.25 V, ID1,ID2 = 0.5 A		0.21	0.45	Ω
$V_{(SLEW)}$	Voltage slew rates on D1 and D2 for ZCC6505A	R_L = 50 Ω to V_{CC}; Refer to Figure 36		48		V/μs
$I_{(SLEW)}$	Current slew rates at D1 and D2 for ZCC6505A	R_L = 5 Ω through transformer; Refer to Figure 37		11		A/μs
$V_{(SLEWHF)}$	Voltage slew rates on D1 and D2 for ZCC6505B	R_L = 50 Ω to V_{CC}; Refer to Figure 36		152		V/μs
$I_{(SLEWHF)}$	Current slew rates at D1 and D2 for ZCC6505B	R_L = 5 Ω through transformer; Refer to Figure 37		41		A/μs
I_{LIM}	Current clamp limit (2.8 V < V_{CC} < 5.5V)		1.42	1.75	2.15	A
	Current clamp limit (2.25 V < V_{CC} < 2.8 V)		0.65		1.85	A
THERMAL SHUT DOWN						
T_{SD+}	T_{SD} turn on temperature		154	168	181	°C
T_{SD-}	T_{SD} turn off temperature		135	150	166	°C
T_{SD-}	T_{SD} hysteresis		13	17		°C

5.6 Timing Requirements

			MIN	NOM	MAX	UNIT
CLK						
$t_{CLKTIMER}$	Duration after which device switches to internal clock in case of invalid external clock		10		25	μs
OUTPUT STAGE						
t_{BBM}	Break-before-make time (ZCC6505A)	Measured as voltage with R_L = 50 Ω to V_{CC}		115		ns
	Break-before-make time (ZCC6505B)	Measured as voltage with R_L = 50 Ω to V_{CC}		90		ns
SOFT-START						
t_{SS}	Soft-start time	10% to 90% transition time on V_{OUT} With transformer C_{LOAD} = 40 μF R_L = 5 Ω	1	4.25	8	ms
$t_{SSdelay}$	Soft-start time delay	From power up to 90% transition time on V_{OUT} With transformer C_{LOAD} = 40 μF R_L = 5 Ω	3.5	8.5	18	ms

5.7 Typical Characteristics

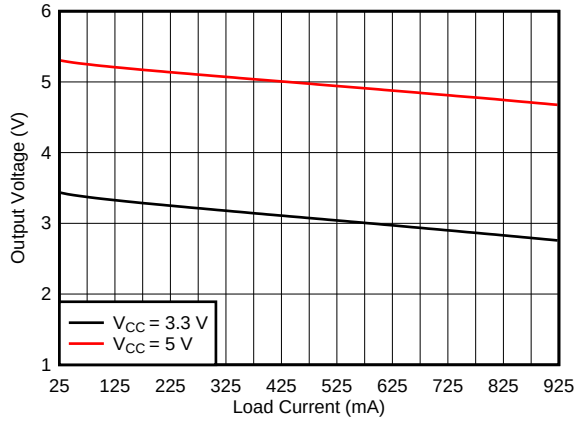

ZCC6505A + Wurth 750315240

Figure 1. Output Voltage vs Load Current

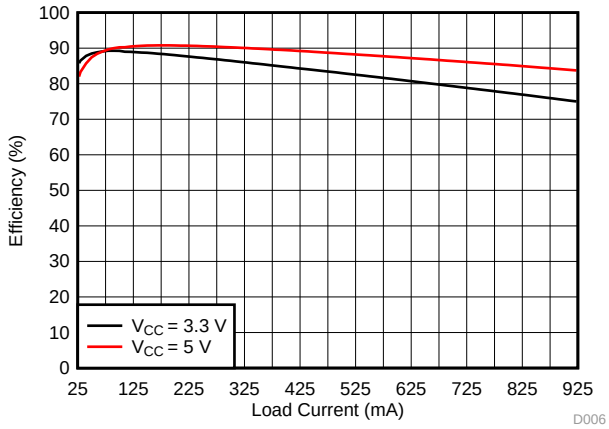

ZCC6505A + Wurth 750315240

Figure 2. Efficiency vs Load Current

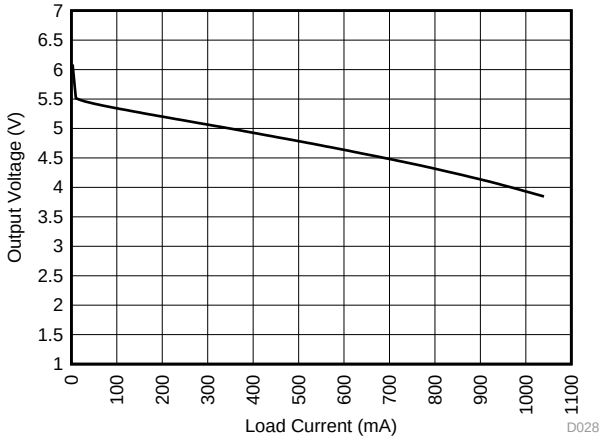

ZCC6505A + Wurth 750316031 V_{CC} = 3.3 V

Figure 3. Output Voltage vs Load Current

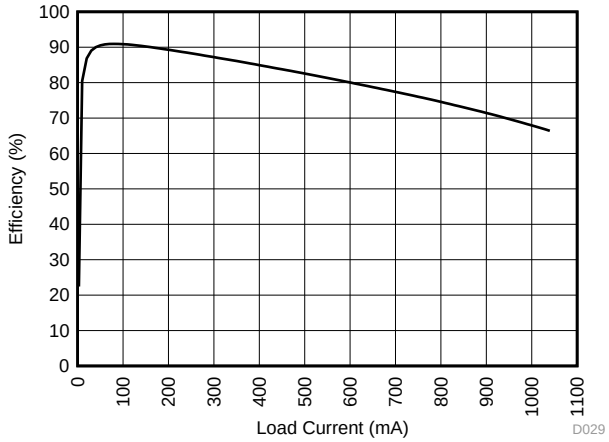

ZCC6505A + Wurth 750316031 V_{CC} = 3.3 V

Figure 4. Efficiency vs Load Current

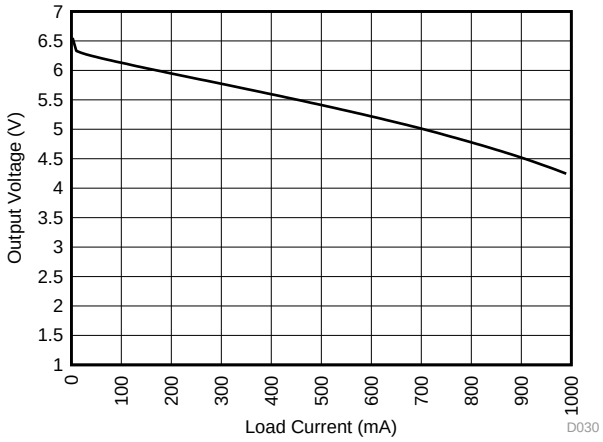

ZCC6505A + Wurth 750316032 V_{CC} = 3.3 V

Figure 5. Output Voltage vs Load Current

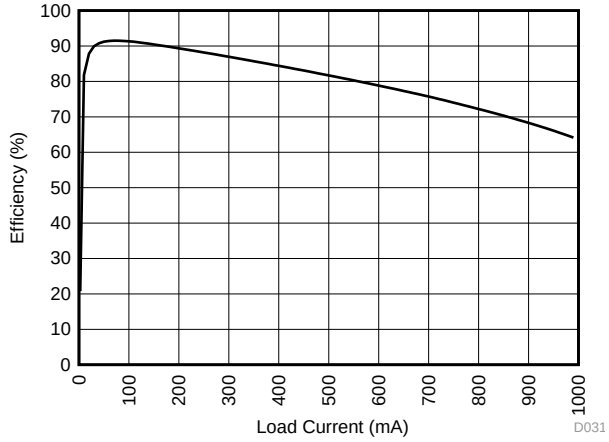

ZCC6505A + Wurth 750316032 V_{CC} = 3.3 V

Figure 6. Efficiency vs Load Current

Typical Characteristics, ZCC6505A (continued)

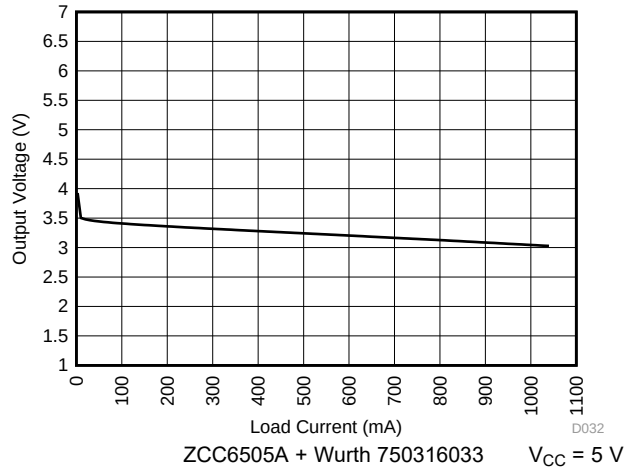

Figure 7. Output Voltage vs Load Current

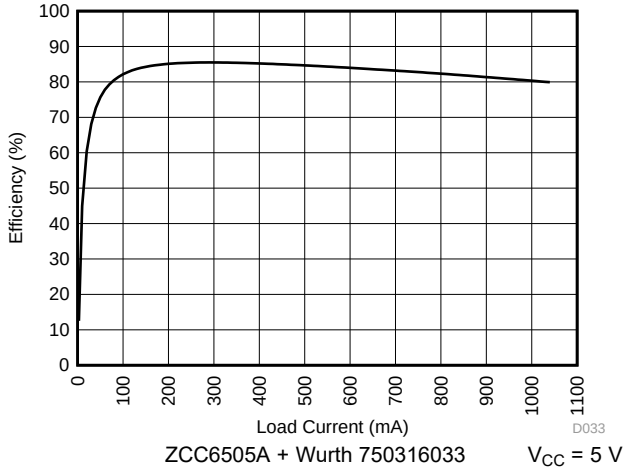

Figure 8. Efficiency vs Load Current

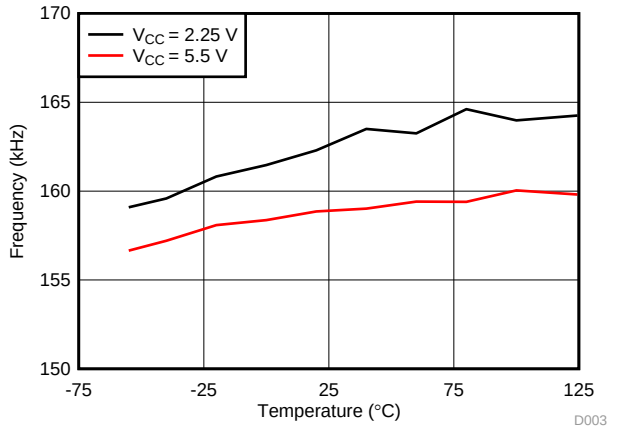

Figure 9. Frequency vs Free-Air Temperature

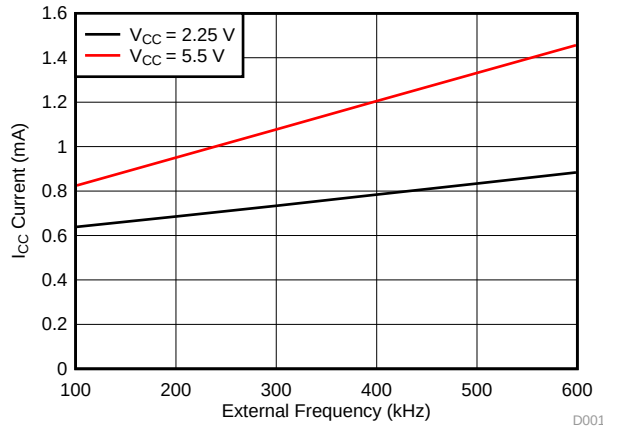

Figure 10. Current vs External Frequency

5.8 Typical Characteristics, ZCC6505B

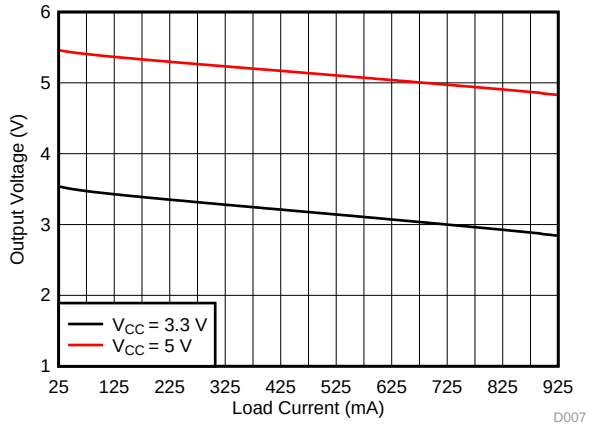

ZCC6505B + Wurth 750315371

Figure 11. Output Voltage vs Load Current

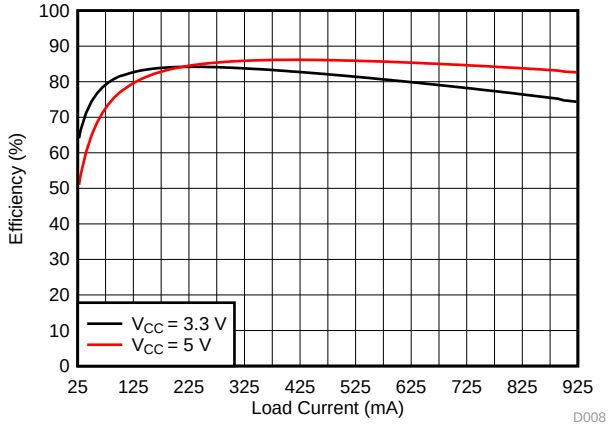

ZCC6505B + Wurth 750315371

Figure 12. Efficiency vs Load Current

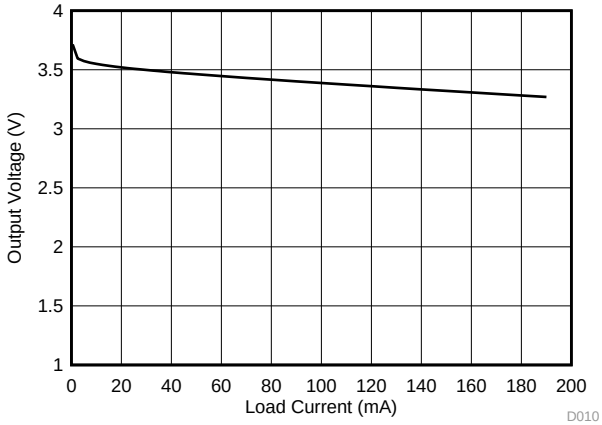

ZCC6505B + Wurth 760390011 V_{CC} = 3.3 V

Figure 13. Output Voltage vs Load Current

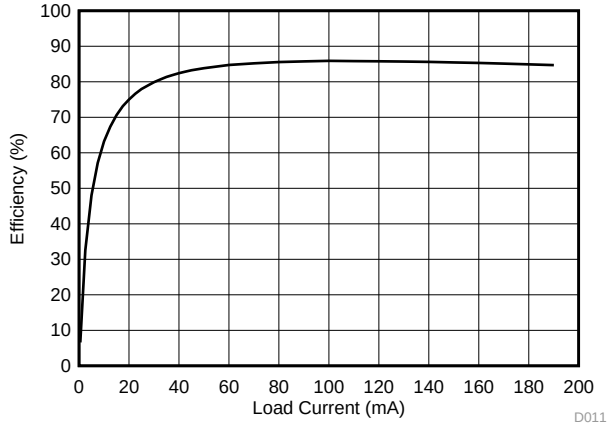

ZCC6505B + Wurth 760390011 V_{CC} = 3.3 V

Figure 14. Efficiency vs Load Current

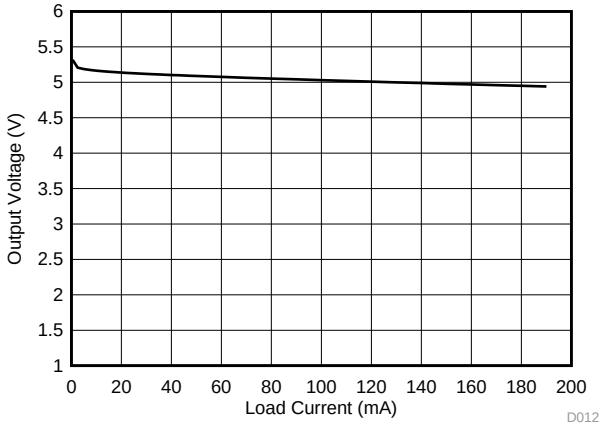

ZCC6505B + Wurth 760390012 V_{CC} = 5 V

Figure 15. Output Voltage vs Load Current

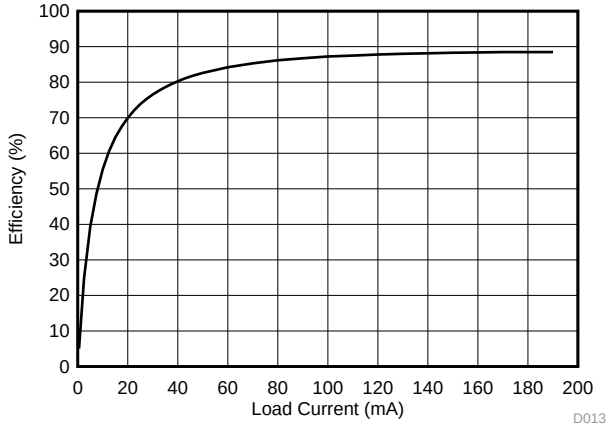

ZCC6505B + Wurth 760390012 V_{CC} = 5 V

Figure 16. Efficiency vs Load Current

Typical Characteristics, ZCC6505B (continued)

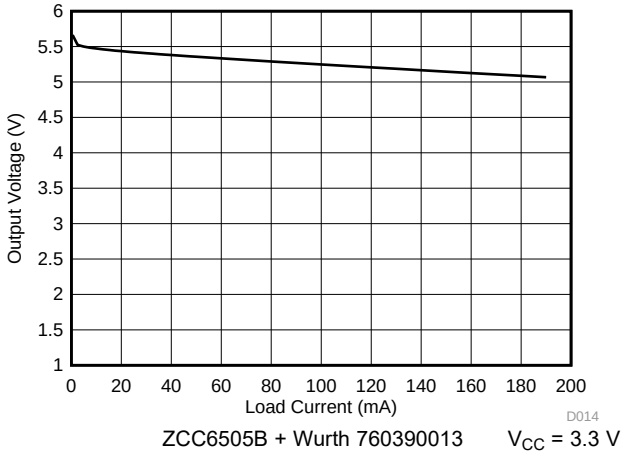

Figure 17. Output Voltage vs Load Current

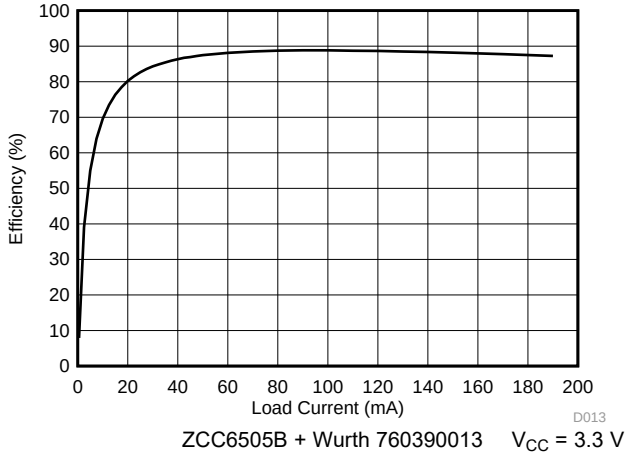

Figure 18. Efficiency vs Load Current

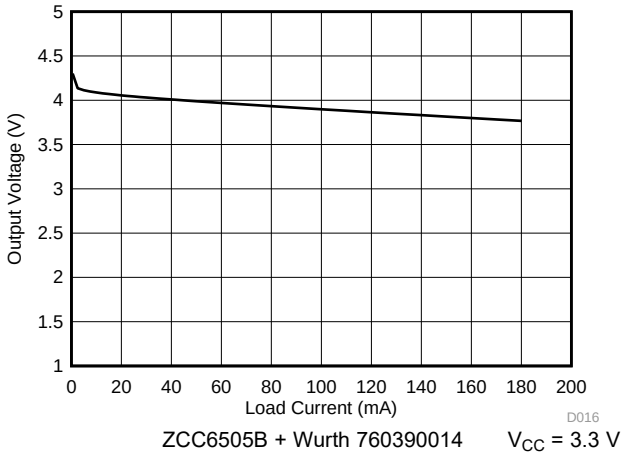

Figure 19. Output Voltage vs Load Current

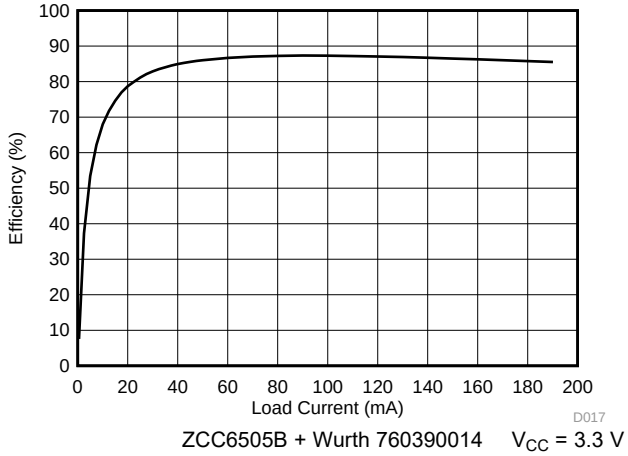

Figure 20. Efficiency vs Load Current

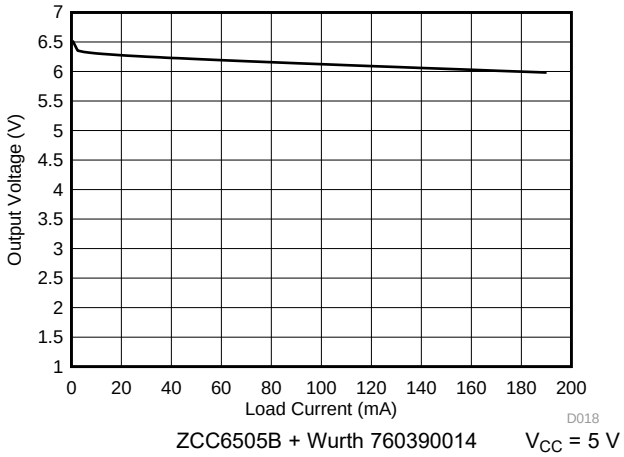

Figure 21. Output Voltage vs Load Current

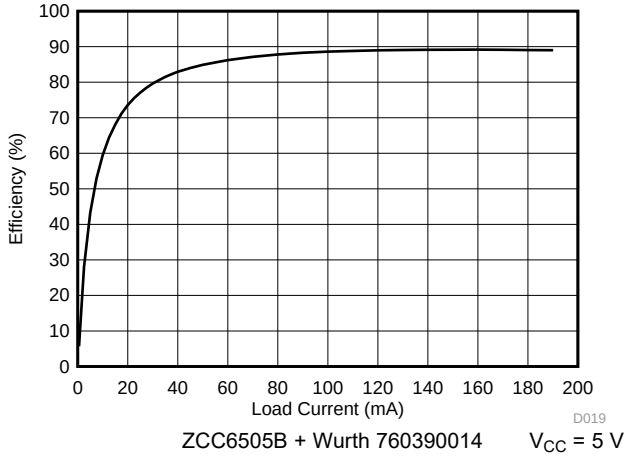

Figure 22. Efficiency vs Load Current

Typical Characteristics, ZCC6505B (continued)

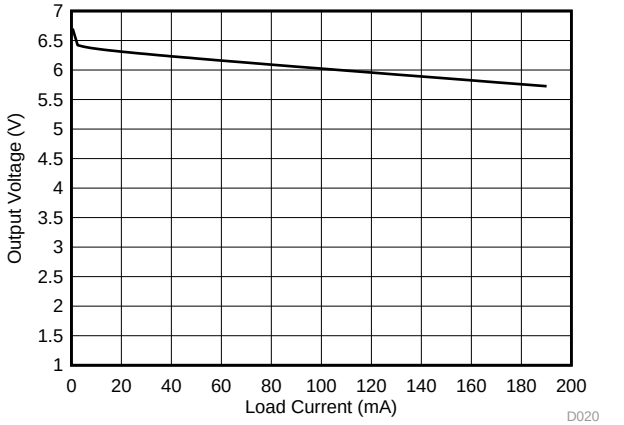

ZCC6505B + Wurth 760390015 V_{CC} = 3.3 V

Figure 23. Output Voltage vs Load Current

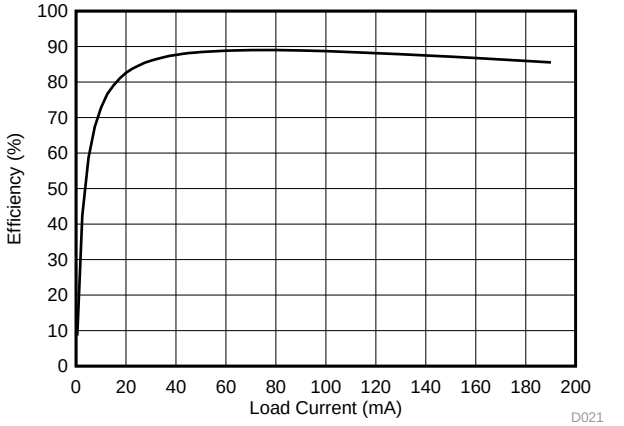

ZCC6505B + Wurth 760390015 V_{CC} = 3.3 V

Figure 24. Efficiency vs Load Current

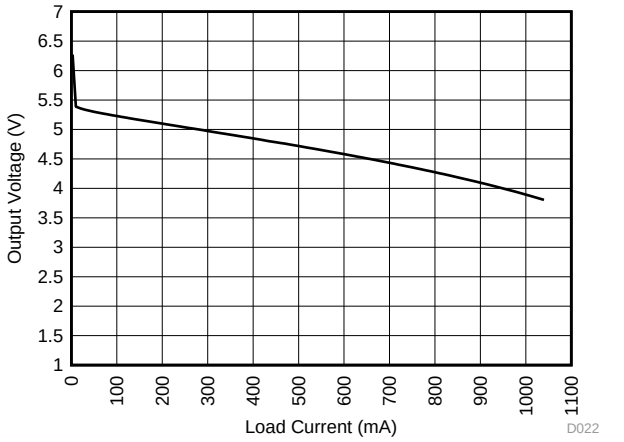

ZCC6505B + Wurth 750316028 V_{CC} = 3.3 V

Figure 25. Output Voltage vs Load Current

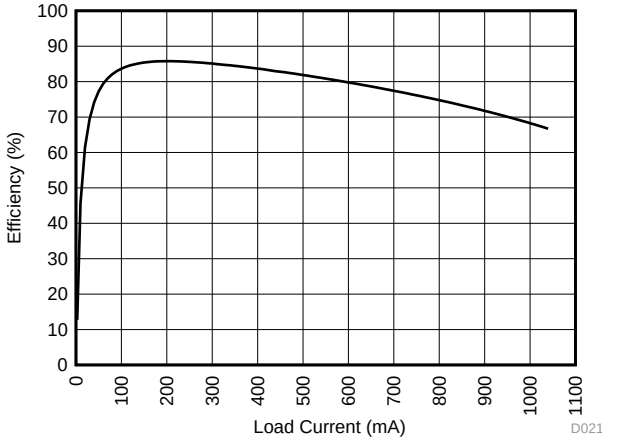

ZCC6505B + Wurth 750316028 V_{CC} = 3.3 V

Figure 26. Efficiency vs Load Current

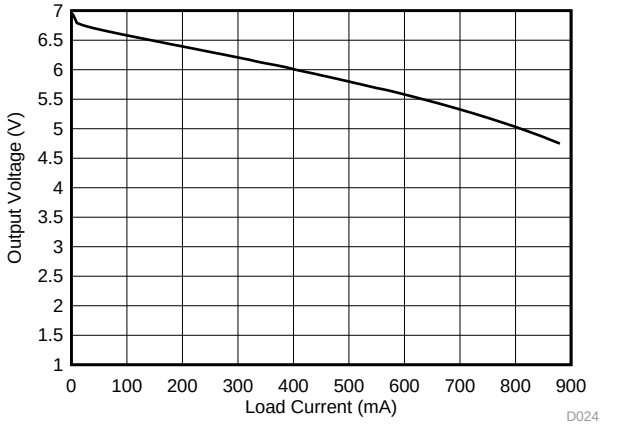

ZCC6505B + Wurth 750316029 V_{CC} = 3.3 V

Figure 27. Output Voltage vs Load Current

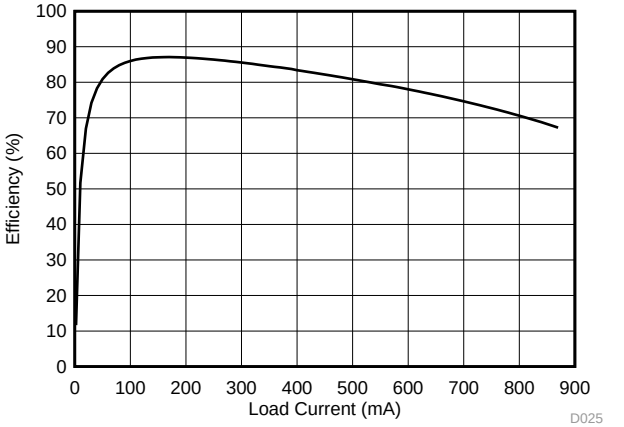

ZCC6505B + Wurth 750316029 V_{CC} = 3.3 V

Figure 28. Efficiency vs Load Current

Typical Characteristics, ZCCC6505B (continued)

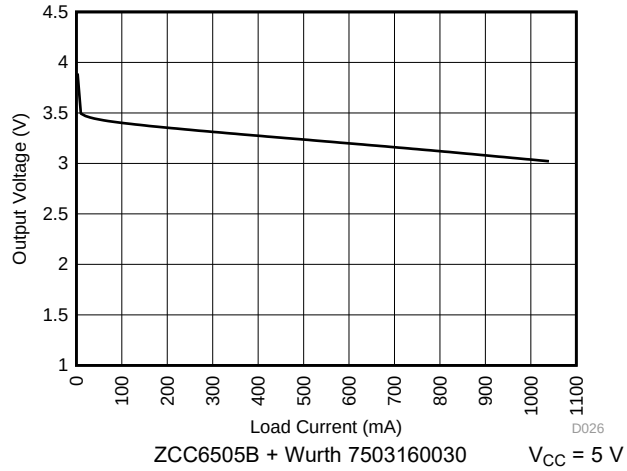

Figure 29. Output Voltage vs Load Current

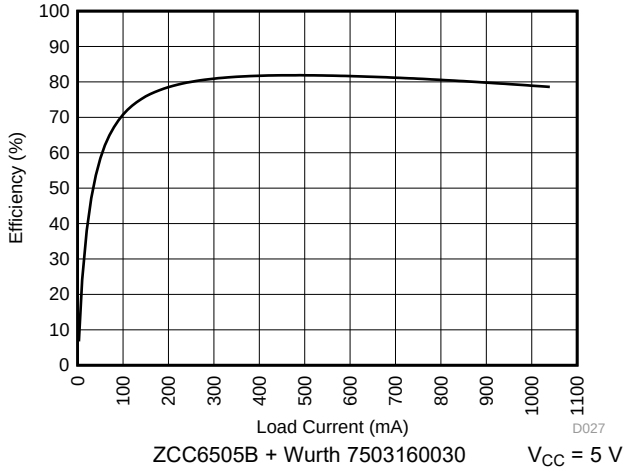

Figure 30. Efficiency vs Load Current

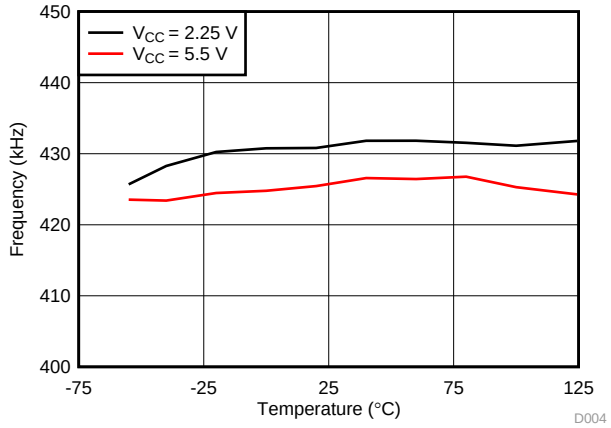

Figure 31. Frequency vs Free-Air Temperature

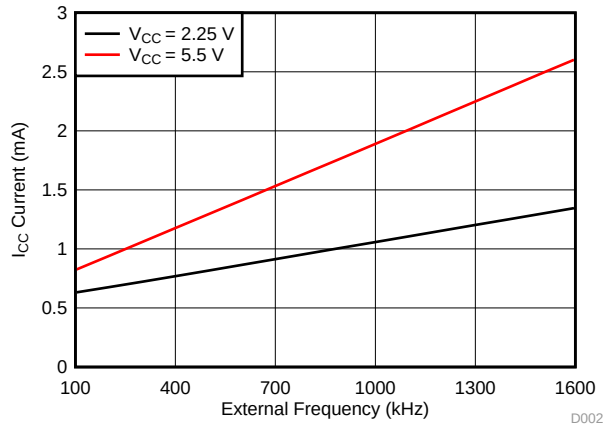

Figure 32. Current vs External Frequency

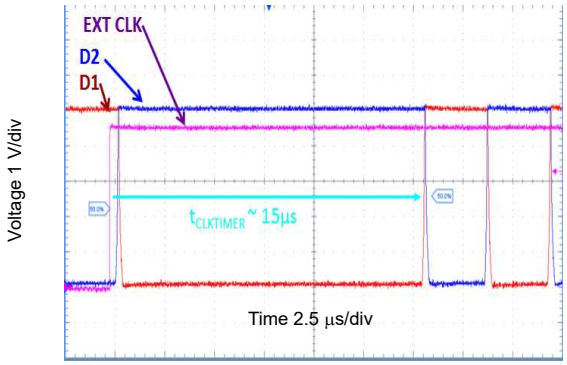

Figure 33. Scope Capture of ZCC6505 Switching from External to Internal Clock

6 Parameter Measurement Information

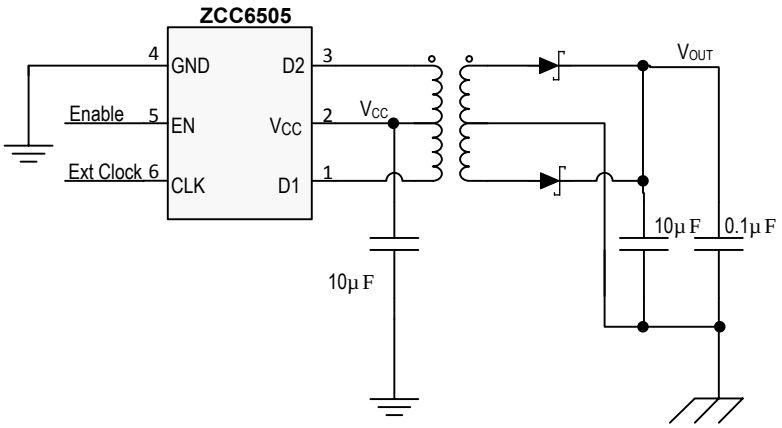

Figure 34. Measurement Circuit for Unregulated Output (TP1)

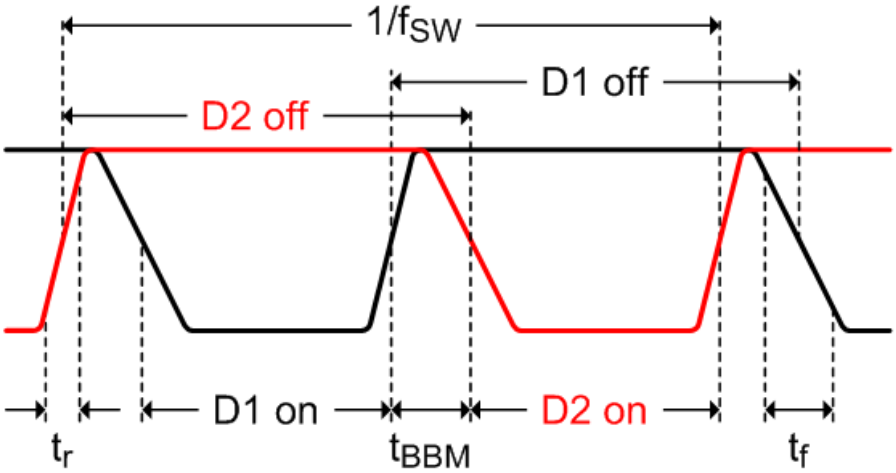

Figure 35. Timing Diagram

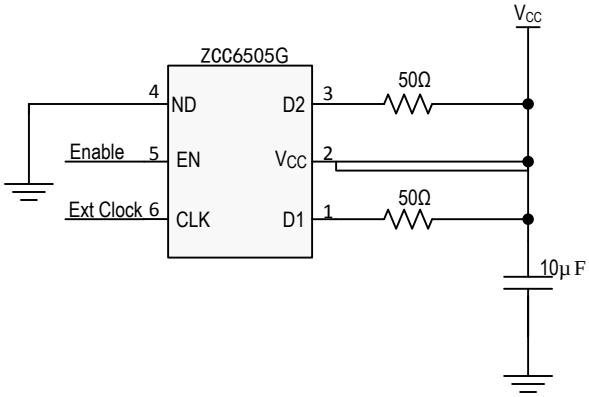

Figure 36. Test Circuit for F_{SW}, $V_{(slew)}$, t_{BBM}

Parameter Measurement Information (continued)

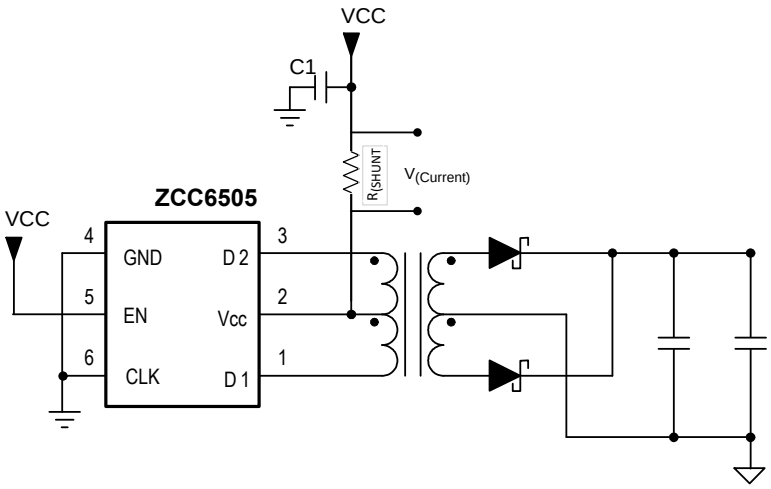

Figure 37. $I_{(slew)}$ Test Setup

7 Detailed Description

7.1 Overview

The ZCC6505 is a transformer driver designed for low-cost, small form-factor, isolated DC/DC converters utili zingthe push-pull topology. The device includes an oscillator that feeds a gate-drive circuit. The gate-d rive,comprising a frequency divider and a break-before-make (BBM) logic, provides two complementary o utputsignals which alternately turn the two output transistors on and off.

The output frequency of the oscillator is divided down by two . A subsequent break-before-make logic inserts a dead-time between the high-pulses of the two signals. Before either one of the gates can assume logic high, the BBM logic ensures a short time period during which both signals are low and both transistors are high-impedance. This short period, is required to avoid shorting out both ends of the primary. The resulting output signals, present the gate-drive signals for the output transistors.

7.2 Functional Block Diagram

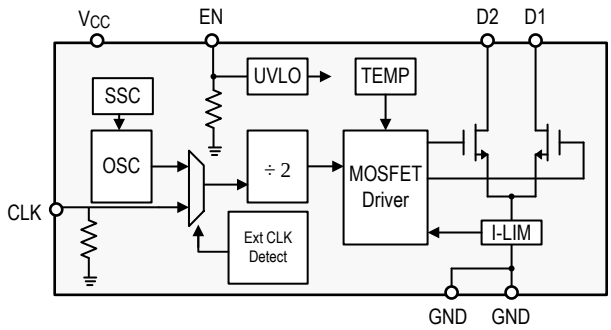

7.3 Feature Description

7.3.1 Push-Pull Converter

Push-pull converters require transformers with center-taps to transfer power from the primary to the secondary (see Figure 38).

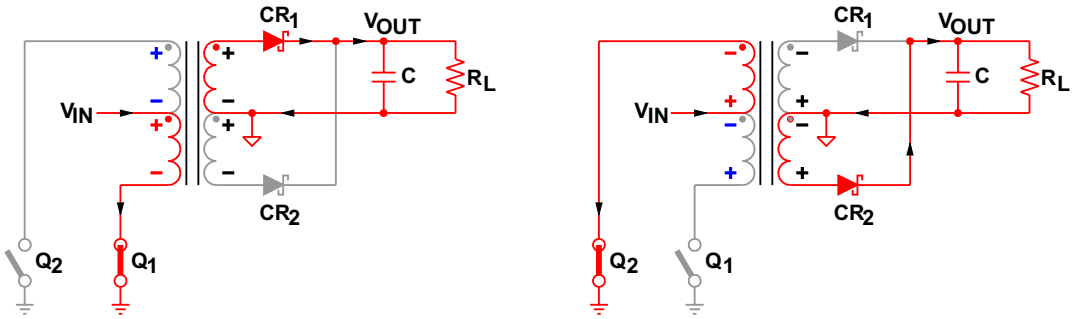

Figure 38. Switching Cycles of a Push-Pull Converter

When Q_1 conducts, V_{IN} drives a current through the lower half of the primary to ground, thus creating a negative voltage potential at the lower primary end with regards to the V_{IN} potential at the center-tap.

At the same time the voltage across the upper half of the primary is such that the upper primary end is positive with regards to the center-tap in order to maintain the previously established current flow through Q_2, which now has turned high-impedance. The two voltage sources, each of which equaling V_{IN}, appear in series and cause a voltage potential at the open end of the primary of $2\times V_{IN}$ with regards to ground.

Feature Description (continued)

Per dot convention the same voltage polarities that occur at the primary also occur at the secondary. The positive potential of the upper secondary end therefore forward biases diode CR_1. The secondary current starting from the upper secondary end flows through CR_1, charges capacitor C, and returns through the load impedance R_L back to the center-tap.

When Q_2 conducts, Q_1 goes high-impedance and the voltage polarities at the primary and secondary reverse. Now the lower end of the primary presents the open end with a $2 \times V_{IN}$ potential against ground. In this case CR_2 is forward biased while CR_1 is reverse biased and current flows from the lower secondary end through CR_2, charging the capacitor and returning through the load to the center-tap.

7.3.2 Core Magnetization

Figure 39 shows the ideal magnetizing curve for a push-pull converter with B as the magnetic flux density and H as the magnetic field strength. When Q_1 conducts the magnetic flux is pushed from A to A', and when Q_2 conducts the flux is pulled back from A' to A. The difference in flux and thus in flux density is proportional to the product of the primary voltage, V_P, and the time, t_{ON}, it is applied to the primary: $B \approx V_P \times t_{ON}$.

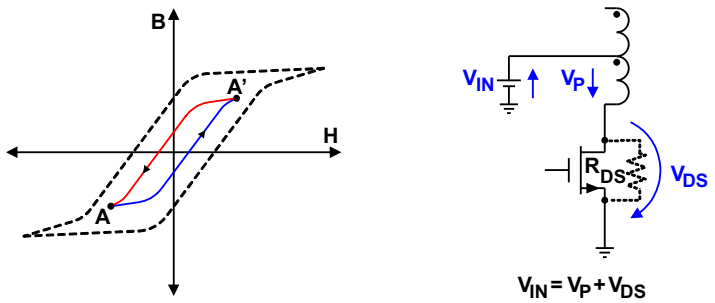

Figure 39. Core Magnetization and Self-Regulation Through Positive Temperature Coefficient of $R_{DS(on)}$

This volt-seconds (V-t) product is important as it determines the core magnetization during each switching cycle. If the V-t products of both phases are not identical, an imbalance in flux density swing results with an offset from the origin of the B-H curve. If balance is not restored, the offset increases with each following cycle and the transformer slowly creeps toward the saturation region.

7.4 Device Functional Modes

The functional modes of the device are divided into start-up, operating, and off-mode.

7.4.1 Start-Up Mode

When the supply voltage at V_{CC} ramps up to 2.25 V , the internal oscillator starts operating . The output stage begins switching but the amplitude of the drain signals at D1 and D2 has not reached its full maximum yet.

7.4.1.1 Soft-Start

ZCC6505A and ZCC6505B devices support soft-start feature. Upon power up or when EN pin transitions from Lowto High, the gate drive of the output power-MOSFET is gradually increased over a period of time from 0 V to V_{CC}.Soft-start prevents high inrush current from V_{CC} while charging large secondary side decoupling capacitors, andalso prevents overshoot in secondary voltage during power-up.

7.4.2 Operating Mode

When the device supply has reached its nominal value ±10% the oscillator is fully operating. However variations over supply voltage and operating temperature can vary the switching frequencies at D1 and D2.

7.4.3 Shutdown-Mode

The device has a dedicated enable pin to put the device in very low power mode to save power when not in use. Enable pin has an internal pull down resistor which keeps device disabled when not driven. When disabled or when V_{CC} is < 1.7 V , both drain outputs, D1 and D2, are tri-stated.

7.4.4 Spread Spectrum Clocking

Radiated emissions is an important concern in high current switching power supplies. ZCC6505 addresses thi s bymodulating its internal clock in such a way that the emitting energy is spread over multiple frequency bins. ThisSpread Spectrum clocking feature greatly improves the emissions performance of the entire power supply blockand hence relieves the system designer from one major concern in isolated power supply design.

7.4.5 External Clock Mode

The ZCC6505 has a CLK pin which can be used to synchronize the device with system clock and in tur n withother ZCC6505 devices so that the system can control the exact switching frequency of the device. The Risingedge of the CLK is used to divide a clock by two and used to drive the gates. Figure 41 show s the timingdiagram for the same. The device also has external clock fail safe feature which automatically switches thedevice to the internal clock if a valid input clock is not present for long ($t_{CLKTIMER}$). The in-bu ilt emissionsreduction scheme of Spread Spectrum clocking is disabled when external clock is present.

8 Application and Implementation

8.1 Application Information

The ZCC6505 is a transformer driver designed for low-cost, small form-factor, isolated DC/DC converters usingthe push-pull topology. The device includes an oscillator that feeds a gate-drive circuit. The gate-drive,comprising a frequency divider and a break-before-make (BBM) logic, provides two complementary outputsignals which alternately turn the two output transistors on and off.

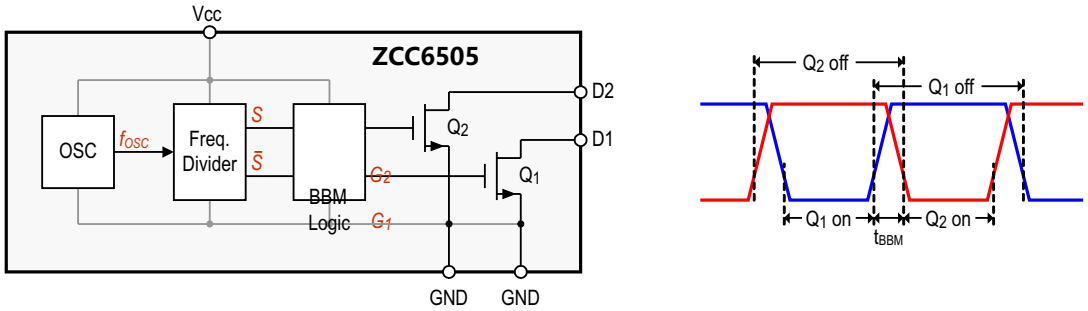

Figure 40. Block Diagram and Output Timing With Break-Before-Make Action

The output frequency of the oscillator is divided down by an asynchronous divider that provides two complementary output signals, S and $\overline{S}$, with a 50% duty cycle. A subsequent break-before-make logic inserts a dead-time between the high-pulses of the two signals. The resulting output signals, G_1 and G_2, present the gate-drive signals for the output transistors Q_1 and Q_2. As shown in Figure 41, before either one of the gates can assume logic high, there must be a short time period during which both signals are low and both transistors are high-impedance. This short period, known as break-before-make time, is required to avoid shorting out both ends of the primary.

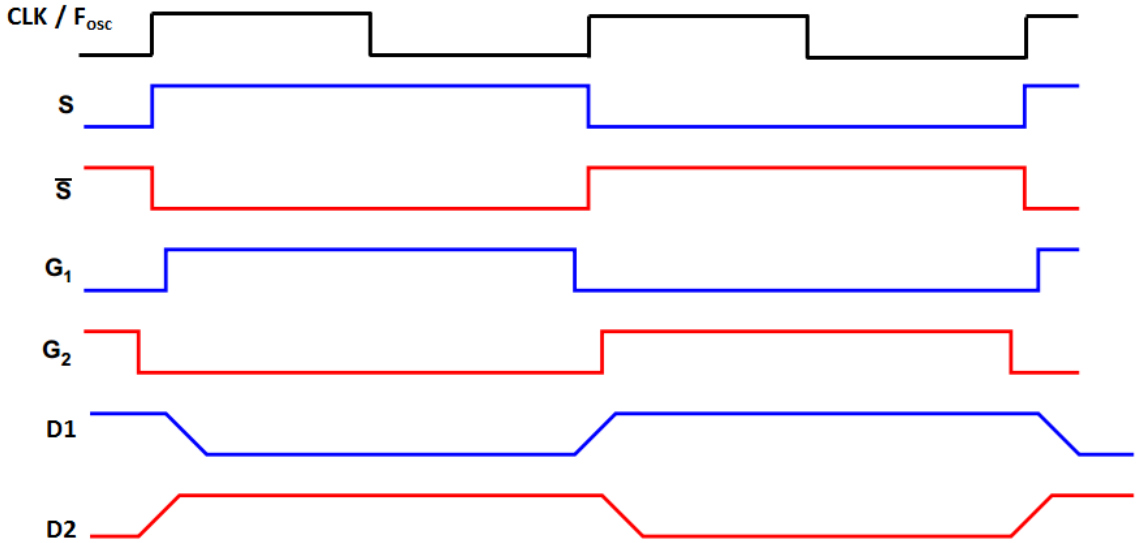

Figure 41. Detailed Output Signal Waveforms

8.2 Typical Application

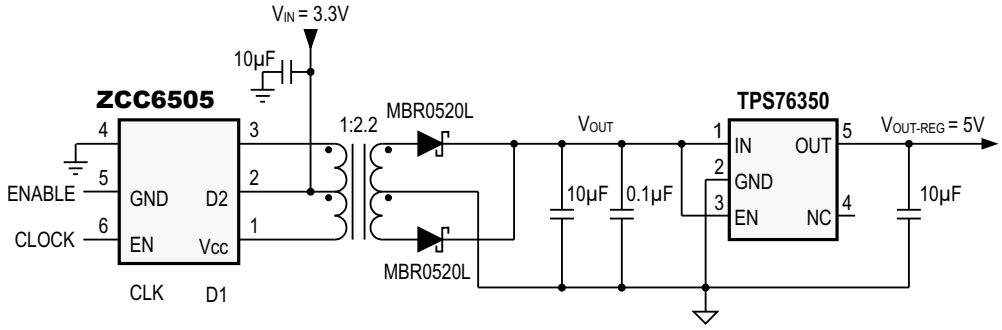

Figure 42. Typical Application Schematic

8.2.1 Design Requirements

For this design example, use the parameters listed in Table 1 as design parameters.

Table 1. Design Parameters

DESIGN PARAMETER	EXAMPLE VALUE
Input voltage range	3.3 V ± 3%
Output voltage	5 V
Maximum load current	100 mA

8.2.2 Detailed Design Procedure

The following recommendations on components selection focus on the design of an efficient push-pull converter with high current drive capability. Contrary to popular belief, the output voltage of the unregulated converter output drops significantly over a wide range in load current. The characteristic curve in Figure 1 and Figure 11 for example, shows that the difference between V_{OUT} at minimum load and V_{OUT} at maximum load exceeds a transceiver's supply range. Therefore, in order to provide a stable, load independent supply while maintaining maximum possible efficiency the implementation of a low dropout regulator (LDO) is strongly advised.

The final converter circuit is shown in Figure 47. The measured V_{OUT} and efficiency characteristics for the regulated and unregulated outputs are shown in Figure 2 and Figure 12.

8.2.2.1 Drive Capability

The transformer driver is designed for low-power push-pull converters with input and output voltages in the range of 2.25 V to 20 V. While converter designs with higher output voltages are possible, care must be taken that higher turns ratios don't lead to primary currents that exceed the specified current limits of the device.

8.2.2.2 LDO Selection

The minimum requirements for a suitable low dropout regulator are:

- Its current drive capability should slightly exceed the specified load current of the application to prevent the LDO from dropping out of regulation. Therefore, for a load current of 600 mA, choose a 600 mA to 750 mA LDO. While regulators with higher drive capabilities are acceptable, they also usually possess higher dropout voltages that will reduce overall converter efficiency.
- The internal dropout voltage, V_{DO}, at the specified load current should be as low as possible to maintain efficiency. For a low-cost 750 mA LDO, a V_{DO} of 600 mV at 750 mA is common. Be aware; however, that this lower value is usually specified at room temperature and can increase by a factor of 2 over temperature, which in turn will raise the required minimum input voltage.
- The required minimum input voltage preventing the regulator from dropping out of line regulation is given with:

$$V_{I\text{-}min} = V_{DO\text{-}max} + V_{O\text{-}max} \quad (1)$$

This means in order to determine V_I for worst-case condition, the user must take the maximum values for V_{DO} and V_O specified in the LDO data sheet for rated output current (that is, 600 mA) and add them together. Also specify that the output voltage of the push-pull rectifier at the specified load current is equal or higher than $V_{I\text{-}min}$. If it is not, the LDO will lose line-regulation and any variations at the input passes straight through to the output. Hence, below $V_{I\text{-}min}$ the output voltage follows the input and the regulator behaves like a simple conductor.

- The maximum regulator input voltage must be higher than the rectifier output under no-load. Under this condition there is no secondary current reflected back to the primary, thus making the voltage drop across $R_{DS\text{-}on}$ negligible and allowing the entire converter input voltage to drop across the primary. At this point, the secondary reaches its maximum voltage of

$$V_{S\text{-}max} = V_{IN\text{-}max} \times n \quad (2)$$

with $V_{IN\text{-}max}$ as the maximum converter input voltage and n as the transformer turns ratio. Thus to prevent the LDO from damage the maximum regulator input voltage must be higher than $V_{S\text{-}max}$. Table 2 lists the maximum secondary voltages for various turns ratios commonly applied in push-pull converters.

Table 2. Required Maximum LDO Input Voltages for Various Push-Pull Configurations

PUSH-PULL CONVERTER				LDO
CONFIGURATION	$V_{IN\text{-}max}$ [V]	TURNS-RATIO	$V_{S\text{-}max}$ [V]	$V_{I\text{-}max}$ [V]
3.3 V_{IN} to 3.3 V_{OUT}	3.6	1.5 ± 3%	5.6	6 to 2 0
3.3 V_{IN} to 5 V_{OUT}	3.6	2.2 ± 3%	8.2	20
5 V_{IN} to 5 V_{OUT}	5.5	1.5 ± 3%	8.5	20

8.2.2.3 Diode Selection

A rectifier diode should always possess low-forward voltage to provide as much voltage to the converter output as possible. When used in high-frequency switching applications, such as the ZCC6505 however, the diode mustalso possess a short recovery time. Schottky diodes meet both requirements and are therefore str onglyrecommended in push-pull converter designs. A good choice for low-volt applications and ambient temper aturesof up to 85°C is the low-cost Schottky rectifier MBR0520L with a typical forward voltage of 275 mV at 1 00-mAforward current. For higher output voltages such as ±10 V and above use the MBR0530 which provides a higherDC blocking voltage of 30 V.

Lab measurements have shown that at temperatures higher than 100°C the leakage currents of the above Schottky diodes increase significantly. This can cause thermal runaway leading to the collapse of the rectifier output voltage. Therefore, for ambient temperatures higher than 85°C use low-leakage Schottky diodes, such as RB168MM-40.

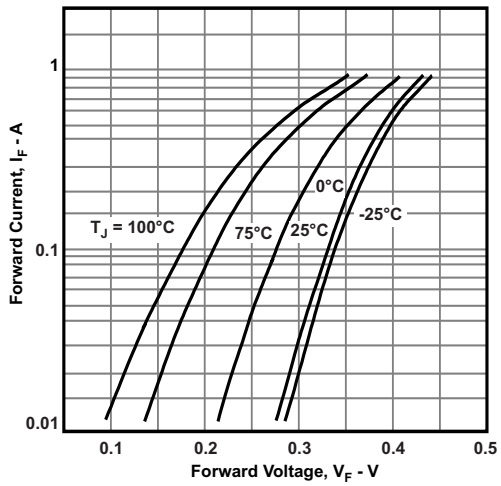

Figure 43. Diode Forward Characteristics for MBR0520L

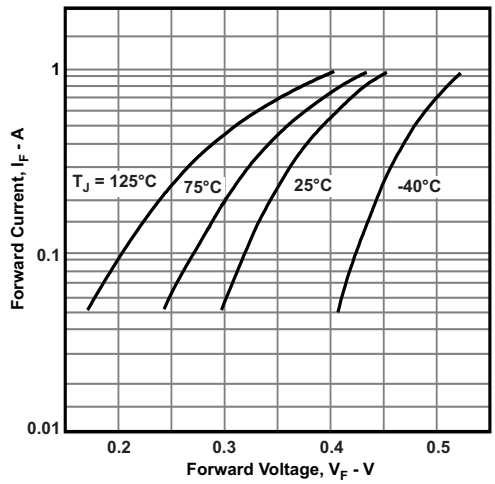

Figure 44. Diode Forward Characteristics MBR0530

8.2.2.4 Capacitor Selection

The capacitors in the converter circuit in Figure 47 are multi-layer ceramic chip (MLCC) capacitors.

As with all high speed CMOS ICs, the device requires a bypass capacitor in the range of 10 nF to 100 nF.

The input bulk capacitor at the center-tap of the primary supports large currents into the primary during the fast switching transients. For minimum ripple make this capacitor 1 μF to 10 μF. In a 2-layer PCB design with a dedicated ground plane, place this capacitor close to the primary center-tap to minimize trace inductance. In a 4-layer board design with low-inductance reference planes for ground and V_{IN}, the capacitor can be placed at the supply entrance of the board. To ensure low-inductance paths use two vias in parallel for each connection to a reference plane or to the primary center-tap.

The bulk capacitor at the rectifier output smooths the output voltage. Make this capacitor 1 μF to 10 μF.

The small capacitor at the regulator input is not necessarily required. However, good analog design practice suggests, using a small value of 47 nF to 100 nF improves the regulator's transient response and noise rejection.

The LDO output capacitor buffers the regulated output for the subsequent isolator and transceiver circuitry. The choice of output capacitor depends on the LDO stability requirements specified in the data sheet. However, in most cases, a low-ESR ceramic capacitor in the range of 4.7 μF to 10 μF will satisfy these requirements.

8.2.2.5 Transformer Selection

8.2.2.5.1 V-t Product Calculation

To prevent a transformer from saturation its V-t product must be greater than the maximum V-t product applied by the device. The maximum voltage delivered by the device is the nominal converter input plus 10%. The maximum time this voltage is applied to the primary is half the period of the lowest frequency at the specified input voltage. Therefore, the transformer's minimum V-t product is determined through:

$$Vt_{min} \geq V_{IN\text{-}max} \times \frac{T_{max}}{2} = \frac{V_{IN\text{-}max}}{2 \times f_{min}} \quad (3)$$

Taking an example of f_{min} as 138 kHz for ZCC6505A and 363 kHZ for ZCC6505B with a 5 V supply, Equation 3 yields the minimum V-t products of:

$$Vt_{min} \geq \frac{5.5\ V}{2 \times 138\ kHz} = 20\ V\mu s \text{ for ZCC6505A, and}$$

$$Vt_{min} \geq \frac{5.5\ V}{2 \times 363\ kHz} = 7.6\ V\mu s \text{ for ZCC6505B applications.} \quad (4)$$

Common V-t values for low-power center-tapped transformers range from 22 Vμs to 150 Vμs with typical footprints of 10 mm x 12 mm. However, transformers specifically designed for PCMCIA applications provide as little as 11 Vμs and come with a significantly reduced footprint of 6 mm x 6 mm only.

While Vt-wise all of these transformers can be driven by the device, other important factors such as isolation voltage, transformer wattage, and turns ratio must be considered before making the final decision.

8.2.2.5.2 Turns Ratio Estimate

Assume the rectifier diodes and linear regulator has been selected. Also, it has been determined that the transformer chosen must have a V-t product of at least 11 Vμs. However, before searching the manufacturer web sites for a suitable transformer, the user still needs to know its minimum turns ratio that allows the push-pull converter to operate flawlessly over the specified current and temperature range. This minimum transformation ratio is expressed through the ratio of minimum secondary to minimum primary voltage multiplied by a correction factor that takes the transformer's typical efficiency of 97% into account:

$$V_{P\text{-}min} = V_{IN\text{-}min} - V_{DS\text{-}max} \quad (5)$$

$V_{S\text{-}min}$ must be large enough to allow for a maximum voltage drop, $V_{F\text{-}max}$, across the rectifier diode and still provide sufficient input voltage for the regulator to remain in regulation. From the *LDO Selection* section, this minimum input voltage is known and by adding $V_{F\text{-}max}$ gives the minimum secondary voltage with:

$$V_{S\text{-}min} = V_{F\text{-}max} + V_{DO\text{-}max} + V_{O\text{-}max} \quad (6)$$

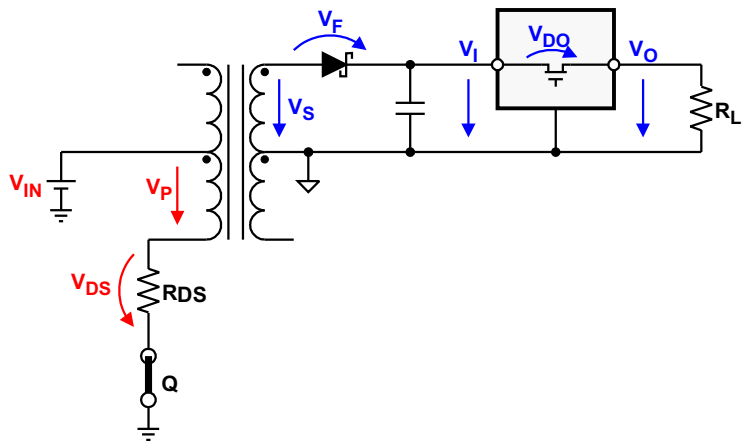

Figure 45. Establishing the Required Minimum Turns Ratio Through $N_{min} = 1.031 \times V_{S\text{-}min} / V_{P\text{-}min}$

Then calculating the available minimum primary voltage, $V_{P\text{-}min}$, involves subtracting the maximum possible drain-source voltage of the device, $V_{DS\text{-}max}$, from the minimum converter input voltage $V_{IN\text{-}min}$:

$$V_{P\text{-}min} = V_{IN\text{-}min} - V_{DS\text{-}max} \tag{7}$$

$V_{DS\text{-}max}$ however, is the product of the maximum $R_{DS(on)}$ and I_D values for a given supply specified in the data sheet:

$$V_{DS\text{-}max} = R_{DS\text{-}max} \times I_{Dmax} \tag{8}$$

Then inserting Equation 8 into Equation 7 yields:

$$V_{P\text{-}min} = V_{IN\text{-}min} - R_{DS\text{-}max} \times I_{Dmax} \tag{9}$$

and inserting Equation 9 and Equation 6 into Equation 5 provides the minimum turns ration with:

$$n_{min} = 1.031 \times \frac{V_{F\text{-}max} + V_{DO\text{-}max} + V_{O\text{-}max}}{V_{IN\text{-}min} - R_{DS\text{-}max} \times I_{D\text{-}max}} \tag{10}$$

Example:

For a 3.3 V_{IN} to 5 V_{OUT} converter using the rectifier diode MBR0520L and the 5 V LDO, the data sheet values taken for a load current of 600 mA and a maximum temperature of 85°C are $V_{F\text{-}max}$ = 0.2 V, $V_{DO\text{-}max}$ = 0.5 V, and $V_{O\text{-}max}$ = 5.1 V.

Then assuming that the converter input voltage is taken from a 3.3 V controller supply with a maximum ±2% accuracy makes $V_{IN\text{-}min}$ = 3.234 V. Finally the maximum values for drain-source resistance and drain current at 3.3 V are taken from the data sheet with $R_{DS\text{-}max}$ = 0.31 Ω and $I_{D\text{-}max}$ = 1 A.

Inserting the values above into Equation 10 yields a minimum turns ratio of:

$$n_{min} = 1.031 \times \frac{0.2\,V + 0.5\,V + 5.1\,V}{3.234\,V - 0.31\,\Omega \times 1\,A} = 2.05 \tag{11}$$

Most commercially available transformers for 3-to-5 V push-pull converters offer turns ratios between 2.0 and 2.3 with a common tolerance of ±3%.

8.2.2.5.3 Recommended Transformers

Depending on the application, use the minimum configuration in Figure 46 or standard configuration in Figure 47.

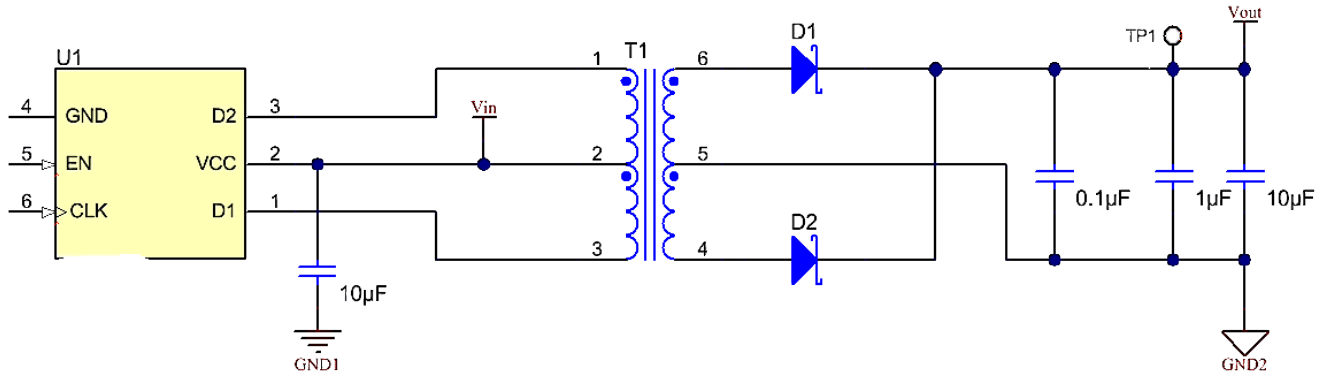

Figure 46. Unregulated Output for Low-Current Loads With Wide Supply Range

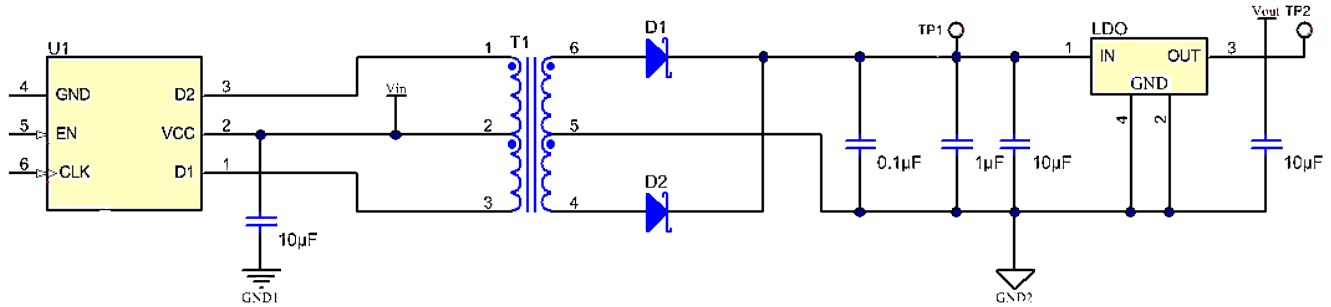

Figure 47. Regulated Output for Stable Supplies and High Current Loads

The Wurth Electronics Midcom isolation transformers in Table 3 are optimized designs for the device, providing high efficiency and small form factor at low-cost.

The 1:1.1 and 1:1.7 turns-ratios are designed for logic applications with wide supply rails and low load currents. These applications operate without LDO, thus achieving further cost-reduction.

Table 3. Recommended Isolation Transformers Optimized for the Device

TURNS RATIO	V × T (Vμs)	ISOLATION (V_{RMS})	DIMENSIONS (mm)	APPLICATION	LDO(1)	ORDER NO.	MANUFACTURER
1:1.1 ±2%	7	2500	6.73 x 10.05 x 4.19	3.3 V → 3.3 V, 100mA, ZCC6505B Refer to Figure 13 and Figure 14	No	760390011	Wurth Electronics / Midcom
1:1.1 ±2%	11			5 V → 5 V, 100mA, ZCC6505B Refer to Figure 15 and Figure 16		760390012	
1:1.7 ±2%				3.3 V → 5 V, 100mA, ZCC6505B Refer to Figure 17 and Figure 18		760390013	
1:1.3 ±2%				3.3 V → 3.3 V, 100mA, ZCC6505B Refer to Figure 19 and Figure 20	Yes	760390014	
1:1.3 ±2%				5 V → 5 V, 100mA, ZCC6505B Refer to Figure 21 and Figure 22		760390014	
1:2.1 ±2%				3.3 V → 5 V, 100mA, ZCC6505B Refer to Figure 23 and Figure 24		760390015	
1.23:1 ±2%				5 V → 3.3 V, 100mA, ZCC6505B		750313710	
1:1.7 ±2%	8.9		8.3 x 12.6 x 4.1	3.3 V → 3.3 V, 1A, ZCC6505B Refer to Figure 25 and Figure 26		750316028	
1:2.1 ±2%				3.3 V → 5 V, 1A, ZCC6505B Refer to Figure 27 and Figure 28	No	750316029	
1.3:1 ±2%	10.8			5 V → 3.3 V, 1A, ZCC6505B Refer to Figure 29 and Figure 30		750316030	
1:1.1 ±2%	8.6			3.3 V → 3.3 V , 1A , ZCC6505B 5 V → 5 V , 1A , ZCC6505B Refer to Figure 11 and Figure 12		750315371	
1:1.1 ±2%	11	5000	9.14 x 12.7 x 7.37	3.3 V → 3.3 V, 100mA, ZCC6505B		750313734	
1:1.1 ±2%				5 V → 5 V, 100mA, ZCC6505B		750313734	
1:1.7 ±2%				3.3 V → 5 V, 100mA, ZCC6505B		750313769	
1:1.3 ±2%				3.3 V → 3.3 V, 100mA, ZCC6505B 5 V → 5 V, 100mA, ZCC6505B	Yes	750313638	
1:2.1 ±2%				3.3 V → 5 V, 100mA, ZCC6505B		750313626	
1.3:1 ±2%				5 V → 3.3 V, 100mA , ZCC6505B	No	750313638	
1:1.75 ±2%	41		12.32 x 15.41 x 11.05	3.3 V → 3.3 V, 1A, ZCC6505A Refer to Figure 3 and Figure 4	Yes	750316031	
1:2 ±2%				3.3 V → 5 V, 1A, ZCC6505A Refer to Figure 5 and Figure 6	No	750316032	
1.3:1 ±2%	42			5.0 V → 3.3 V, 1A, ZCC6505A Refer to Figure 7 and Figure 8		750316033	
1:1.1 ±2%	23		14.88 x 12.32 x 11.05	3.3 V → 3.3 V, 1A, ZCC6505A 5 V → 5 V, 1A , ZCC6505A Refer to Figure 1 and Figure 2		750315240	

(1) For configurations with LDO, a higher voltage than the required output voltage is generated, to allow for LDO drop-out. Figures show the voltage and efficiency at the LDO input.

8.2.3 Application Curves

See the*Typical Characteristics, ZCC65055 A* and *Typical Characteristics, ZCC6505B* for application curves withtransformers optimized for the device, providing high efficiency and small form factor at low-cost.

8.2.4 System Examples

8.2.4.1 Higher Output Voltage Designs

The device can drive push-pull converters that provide high output voltages of up to 30 V, or bipolar outputs of up to ±15 V. Using commercially available center-tapped transformers, with their rather low turns ratios of 0.8 to 5, requires different rectifier topologies to achieve high output voltages. Figure 48 to Figure 50 show some of these topologies together with their respective open-circuit output voltages.

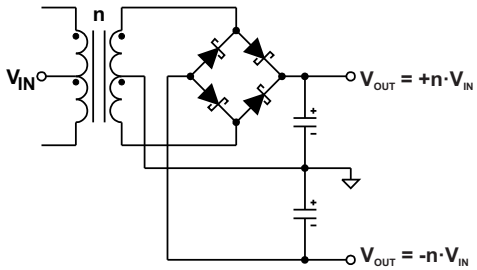

Figure 48. Bridge Rectifier With Center-Tapped Secondary Enables Bipolar Outputs

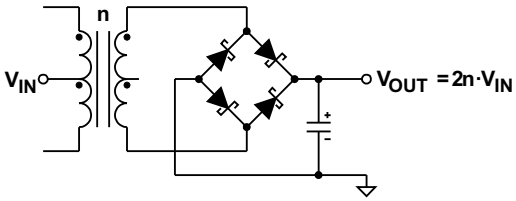

Figure 49. Bridge Rectifier Without Center-Tapped Secondary Performs Voltage Doubling

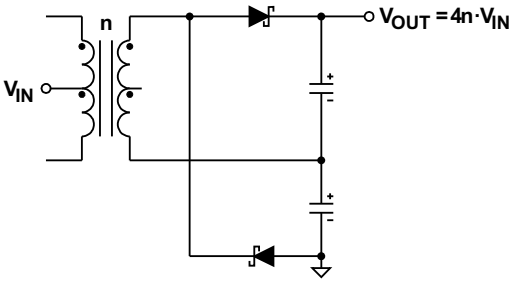

Figure 50. Half-Wave Rectifier Without Centered Ground and Center-Tapped Secondary Performs Voltage Doubling Twice, Hence Quadrupling V_{IN}

8.2.4.2 Application Circuits

The following application circuits are shown for a 3.3 V input supply commonly taken from the local, regulated microcontroller supply. For 5 V input voltages requiring different turn ratios refer to the transformer manufacturers and their web sites listed in Table 4.

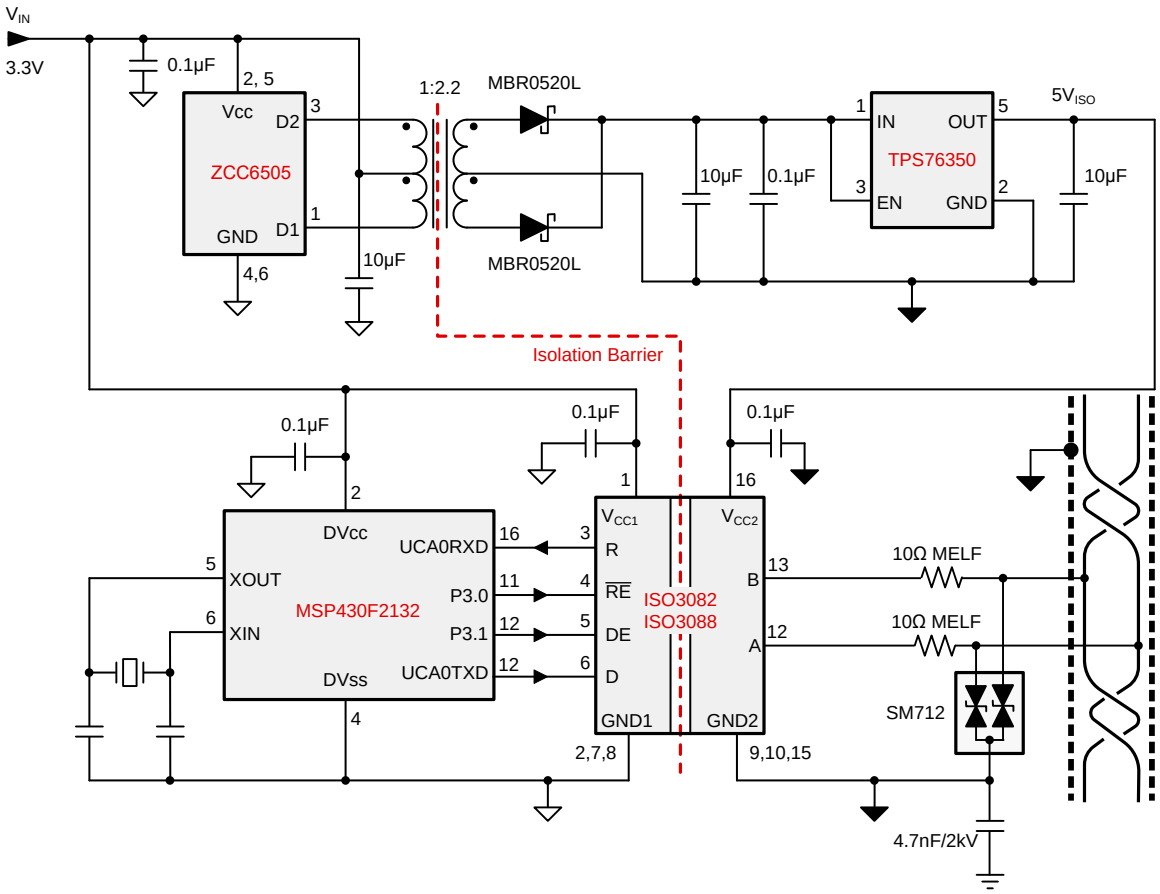

Figure 51. Isolated RS-485 Interface

9 Power Supply Recommendations

The device is designed to operate from an input voltage supply range between 2.5 V and 5 V nominal. This input supply must be regulated within ±10%. If the input supply is located more than a few inches from the device, a 0.1 μF by-pass capacitor should be connected as close as possible to the device V_{CC} pin and a 10 μF capacitor should be connected close to the transformer center-tap pin.

10 Layout

10.1 Layout Guidelines

- The V_{IN} pin must be buffered to ground with a low-ESR ceramic bypass-capacitor. The recommended capacitor value can range from 1 μF to 10 μF. The capacitor must have a voltage rating of 10 V minimum and a X5R or X7R dielectric.
- The optimum placement is closest to the V_{IN} and GND pins at the board entrance to minimize the loop area formed by the bypass-capacitor connection, the V_{IN} terminal, and the GND pin. See Figure 52 for a PCB layout example.
- The connections between the device D1 and D2 pins and the transformer primary endings, and the connection of the device V_{CC} pin and the transformer center-tap must be as close as possible for minimum trace inductance.
- The connection of the device V_{CC} pin and the transformer center-tap must be buffered to ground with a low-ESR ceramic bypass-capacitor. The recommended capacitor value can range from 1μF to 10 μF. The capacitor must have a voltage rating of 16 V minimum and a X5R or X7R dielectric.
- The device GND pins must be tied to the PCB ground plane using two vias for minimum inductance.
- The ground connections of the capacitors and the ground plane should use two vias for minimum inductance.
- The rectifier diodes should be Schottky diodes with low forward voltage in the 10 mA to 100 mA current range to maximize efficiency.
- The V_{OUT} pin must be buffered to ISO-Ground with a low-ESR ceramic bypass-capacitor. The recommended capacitor value can range from 1μF to 10 μF. The capacitor must have a voltage rating of 16 V minimum and a X5R or X7R dielectric.

10.2 Layout Example

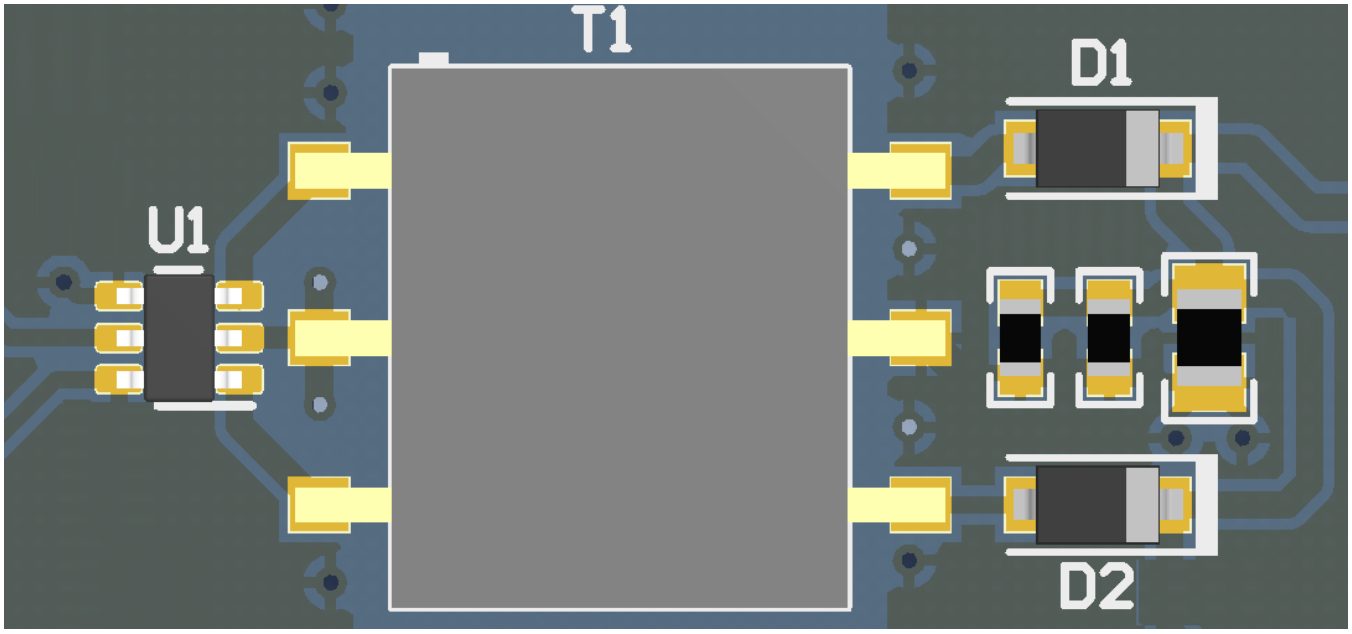

Figure 52. Layout Example of a 2-Layer Board

TAPE AND REEL INFORMATION

REEL DIMENSIONS

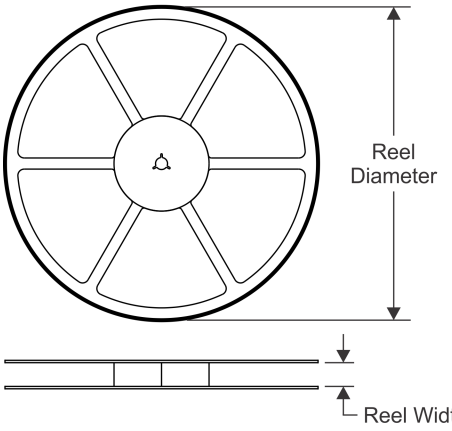

TAPE DIMENSIONS

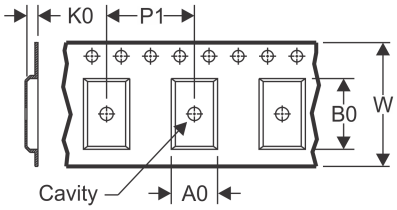

A0	Dimension designed to accommodate the component width
B0	Dimension designed to accommodate the component length
K0	Dimension designed to accommodate the component thickness
W	Overall width of the carrier tape
P1	Pitch between successive cavity centers

QUADRANT ASSIGNMENTS FOR PIN 1 ORIENTATION IN TAPE

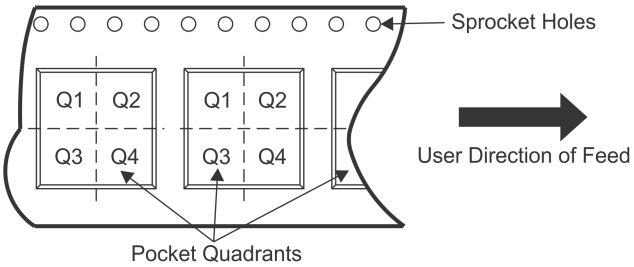

*All dimensions are nominal

Device	Package Type	Package Drawing	Pins	SPQ	Reel Diameter (mm)	Reel Width W1 (mm)	A0 (mm)	B0 (mm)	K0 (mm)	P1 (mm)	W (mm)	Pin1 Quadrant
ZCC6505ADBVR	SOT-23	DBV	6	3000	178.0	9.0	3.23	3.17	1.37	4.0	8.0	Q3
ZCC6505ADBVT	SOT-23	DBV	6	250	178.0	9.0	3.23	3.17	1.37	4.0	8.0	Q3
ZCC6505BDBVR	SOT-23	DBV	6	3000	178.0	9.0	3.23	3.17	1.37	4.0	8.0	Q3
ZCC6505BDBVT	SOT-23	DBV	6	250	178.0	9.0	3.23	3.17	1.37	4.0	8.0	Q3

TAPE AND REEL BOX DIMENSIONS

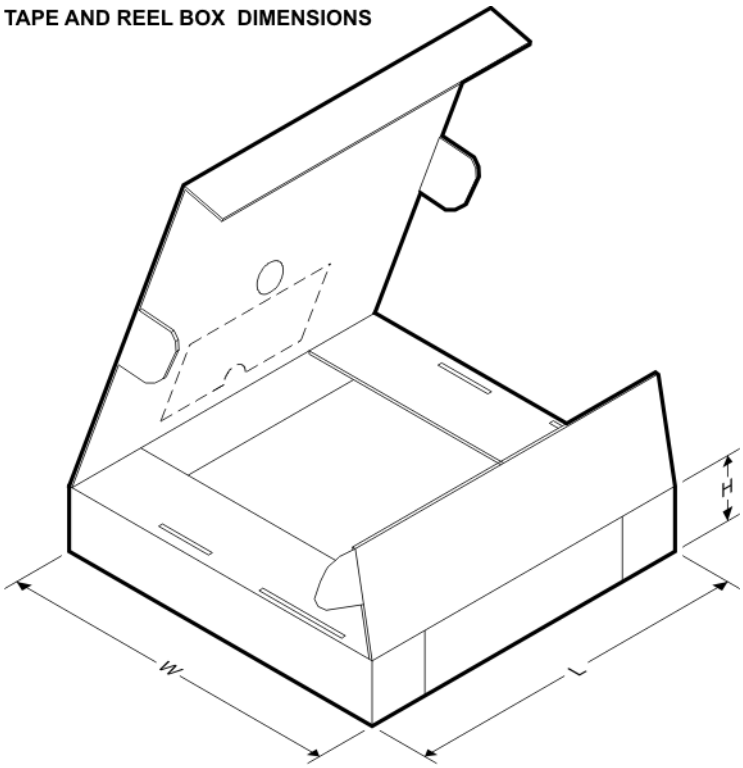

*All dimensions are nominal

Device	Package Type	Package Drawing	Pins	SPQ	Length (mm)	Width (mm)	Height (mm)
ZCC6505ADBVR	SOT-23	DBV	6	3000	180.0	180.0	18.0
ZCC6505ADBVT	SOT-23	DBV	6	250	180.0	180.0	18.0
ZCC6505BDBVR	SOT-23	DBV	6	3000	180.0	180.0	18.0
ZCC6505BDBVT	SOT-23	DBV	6	250	180.0	180.0	18.0

PACKAGE OUTLINE

SOT-23 - 1.45 mm max height

SMALL OUTLINE TRANSISTOR

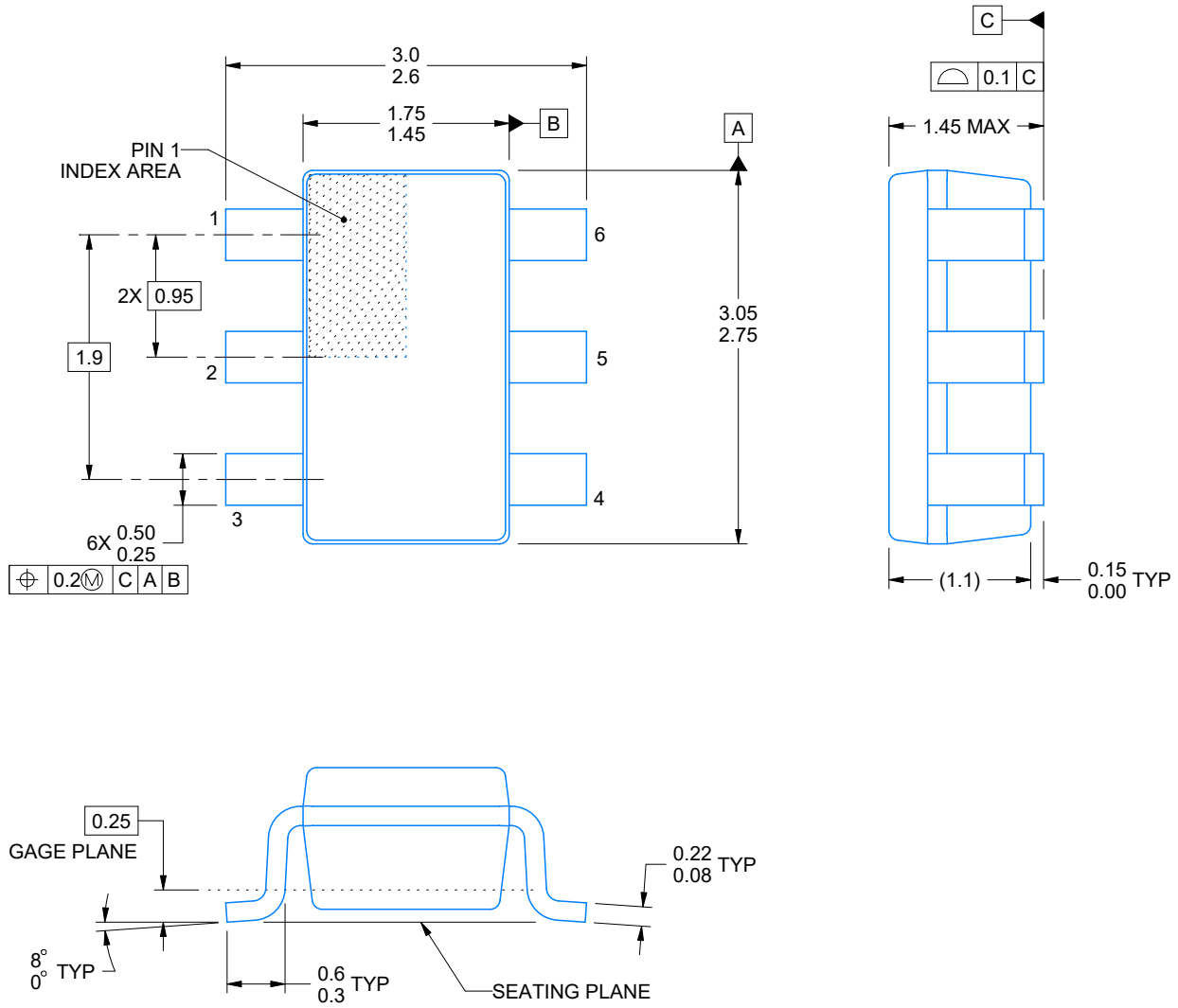

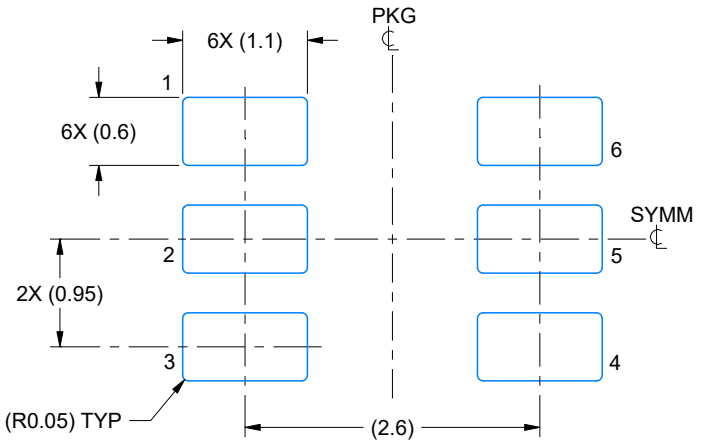

LAND PATTERN EXAMPLE
EXPOSED METAL SHOWN
SCALE:15X

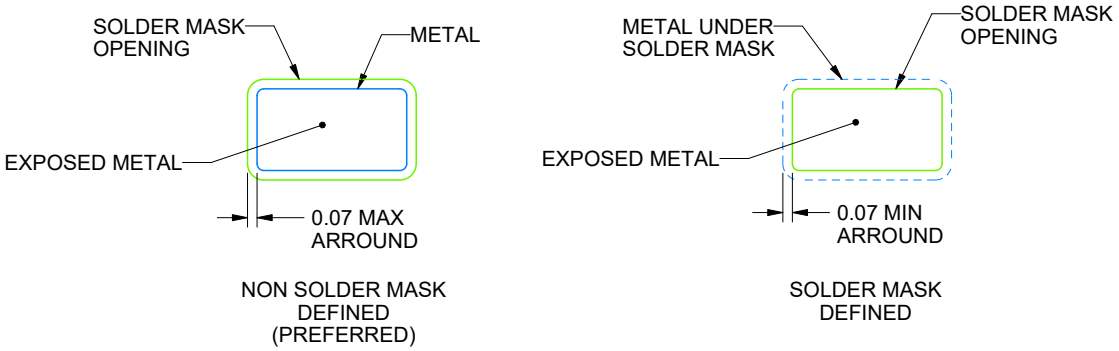

SOLDER MASK DETAILS

NOTES: (continued)

6. Publication IPC-7351 may have alternate designs.
7. Solder mask tolerances between and around signal pads can vary based on board fabrication site.

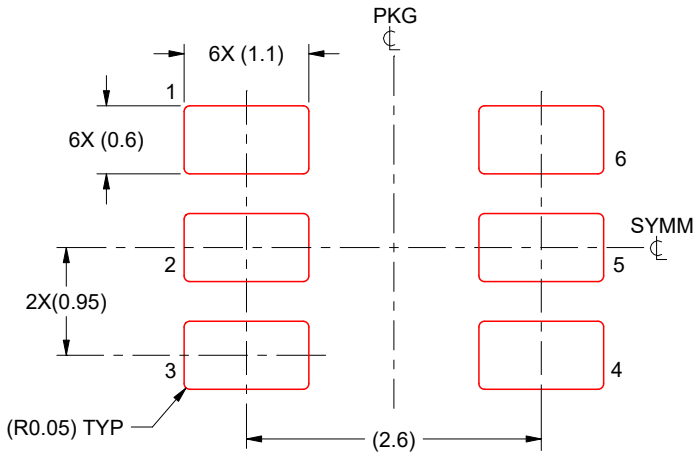

SOLDER PASTE EXAMPLE
BASED ON 0.125 mm THICK STENCIL
SCALE:15X

NOTES: (continued)

8. Laser cutting apertures with trapezoidal walls and rounded corners may offer better paste release. IPC-7525 may have alternate design recommendations.
9. Board assembly site may have different recommendations for stencil design.