# ZCC541A/B

40V 1A Low-Dropout Linear Voltage Regulator

## ■ Description

The ZCC541A/B series is a high input voltage (40V), low-dropout linear regulator (LDO) able to provide 1A load current. The ZCC541A/B family LDO offers EN pin to enable and disable the LDO output, EN pin can take 40V input voltage.

The LDO features very fast response against line voltage transient and load current transient, and ensures no overshoot voltage during the LDO start up and short circuit recovery.

The device features integrated short-circuit and thermal shutdown protection.

Fixed voltages of 12V, 5.0V , 3.3V , 3.0V and 1.8V are available on ZCC541BKP with adjustable output voltages to 0.6V on ZCC541AKP.

## ■ Features

- Fixed and adjustable output voltages to 0.6V
- High Input Voltage Rating：Up to 40V
- High Output Current：1A
- High PSRR：65dB at 1kHZ
- Low Dropout Voltage：1.5V@1A
- Fixed Output Voltages：

  1.8V, 3.0V, 3.3V,5.0V and ADJ
- High-accuracy Output Voltage: ±2%
- Fast Transient Response
- Integrated Short-Circuit Protection
- Enable pin is available
- Integrated Thermal Protection
- Available Packages：ESOP8

## ■ Application

- Servers and laptops
- Smart phone and PDA
- MP3/MP4
- Home Appliance

## ■ Application Circuits

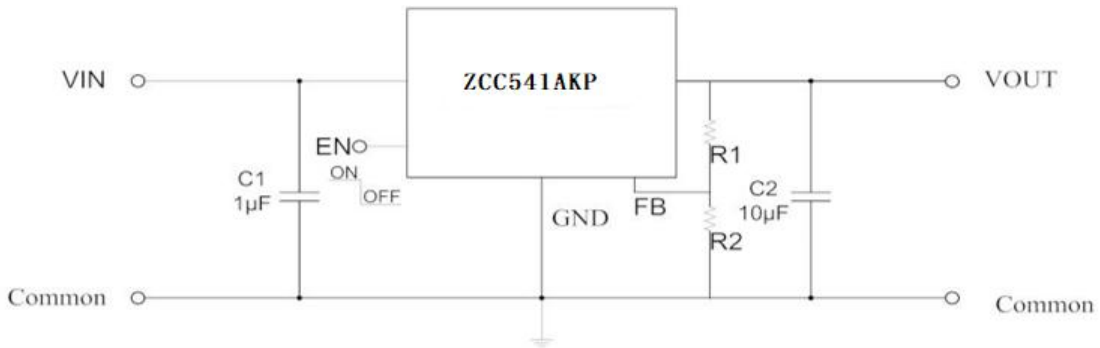

## ■ Packages And Pin Assignment

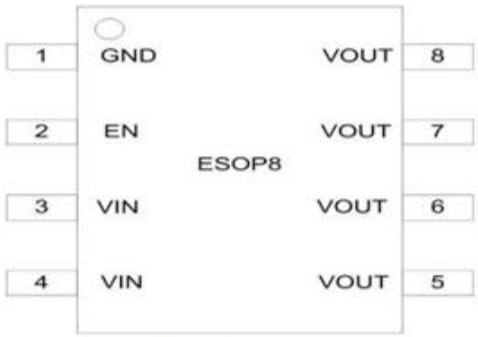


ZCC541BKP

ZCC541AKP

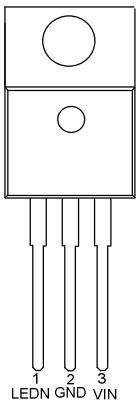


## ■ Pin Descriptions

| ESOP8 | | Pin Name | Description |
|---|---|---|---|
| ZCC541BKP | ZCC541AKP | | |
| 1 | 1 | GND | Ground Pin |
| 5,6,7,8 | 6 | VOUT | Output Pin |
| 3,4 | 3,4 | VIN | Input Pin |
| | 8 | FB | FB Pin |
| 2 | 2 | EN | EN Pin |
| | 5,7 | NC | NC |

## ■ Functional Block Diagram

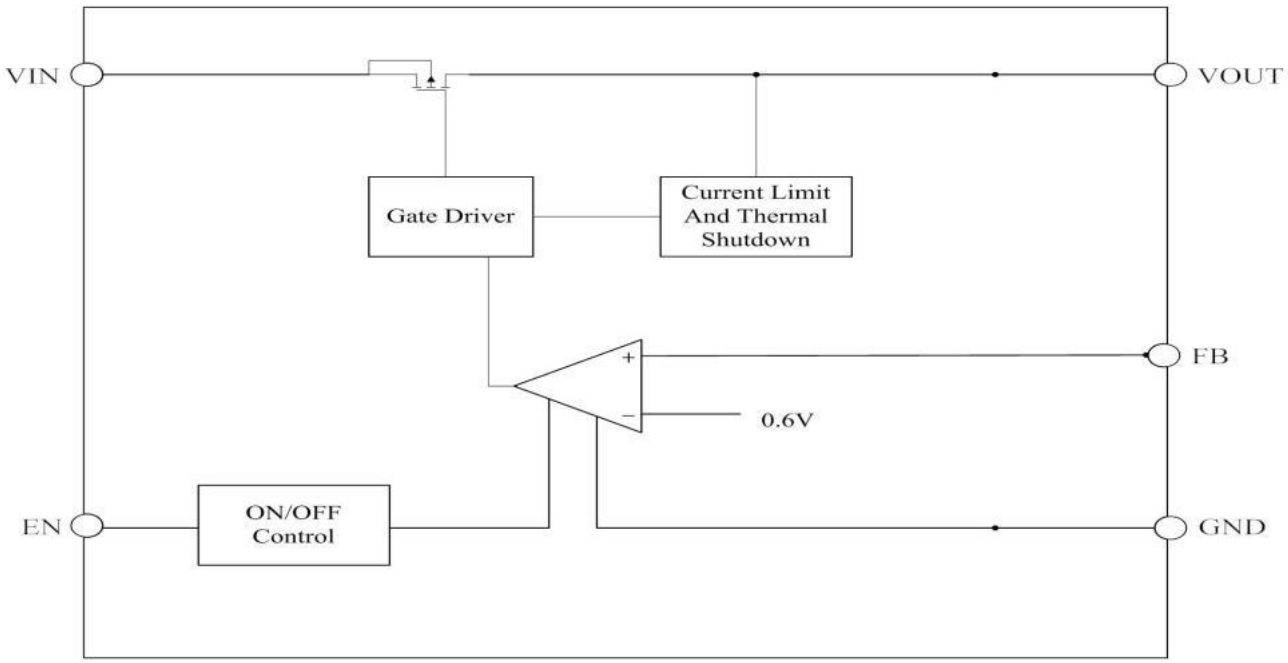

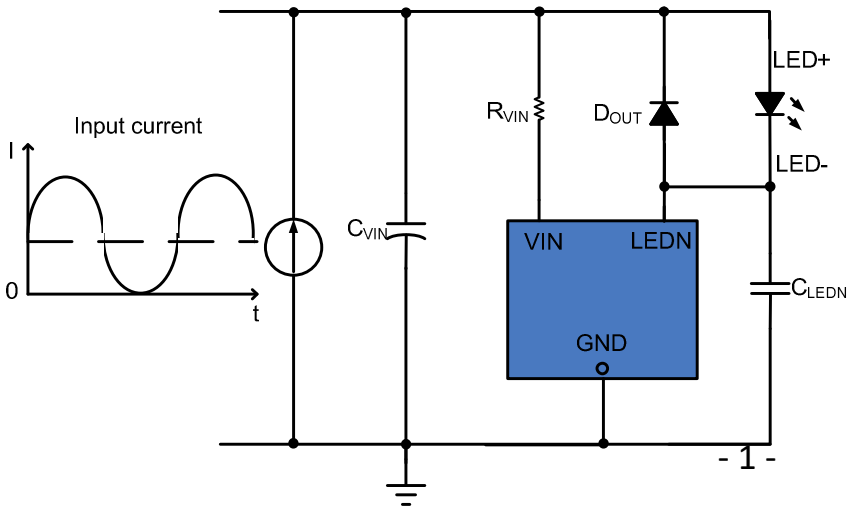




## **Pinout** (top view)

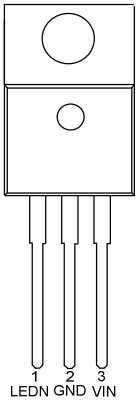


**(TO220-3)**

**Top Mark: AZGxyz (**device code: **AZG**, ***x=year code, y=week code, z= lot number code*****)**

| Pin Name | Pin Description |
|---|---|
| LEDN | Cathode of LED string. |
| VIN | Power Supply |
| GND | Ground pin |

## ■ Absolute Maximum Ratings

| Item | Description | Min | Max | Unit |
|---|---|---|---|---|
| Voltage | VIN to GND | -0.3 | 40 | V |
| | VOUT to GND | -0.3 | 14 | V |
| | VOUT to VIN | -55 | 0.3 | V |
| | EN to GND | -0.3 | 40 | V |
| Current | Peak output current | Internally limited | | |
| Temperature | Operating Ambient Temperature | -40 | 85 | ℃ |
| | Storage Temperature | -40 | 150 | ℃ |
| | Operating virtual junction Temperature | - | 150 | ℃ |
| Electrostatic discharge rating | Human Body Model（HBM） | 4 | | kV |
| | Charged Device Model（MM） | 100 | | V |

## ■ Electrical Characteristics

（At $T_A$=25°C, $C_{IN}$=1uF, $V_{IN}$=$V_{OUTNOM}$+1.0V, $C_{OUT}$=10uF, unless otherwise noted）

| Symbol | Parameter | Test Conditions | Min | Typ | Max | Unit |
|---|---|---|---|---|---|---|
| VIN | Input Voltage | | 3 | — | 40 | V |
| VOUT | Output Voltage | Iout=10mA | $V_{OUTNOM}$ * 0.98 | $V_{OUTNOM}$ | $V_{OUTNOM}$ * 1.02 | V |
| $I_{OUT_MAX}$ | Output Current | | 1 | — | — | A |
| $V_{DROP}$ | Dropout Voltage(1) | Iout=10mA , $V_{IN}$=$V_{OUTNOM}$-0.1V | — | 15 | — | mV |
| | | Iout=100mA , $V_{IN}$=$V_{OUTNOM}$-0.1V | — | 150 | — | mV |
| | | Iout=1A , $V_{IN}$=$V_{OUTNOM}$-0.1V | — | 1.5 | — | V |
| $\Delta V_{out}/V_{out}$ | Load Regulation | Iout from 1mA to 1A | -1 | — | 1 | % |
| $\frac{\Delta V_{out}}{\Delta V_{in}}/V_{out}$ | Line Regulation | Iout=1mA, Vin=Vout+1V to 36V | — | 0.01 | — | %/V |
| $I_{LIMIT}$ | Current Limit | | — | 1.1 | — | A |
| $T_{SHDN}$ | Thermal Shutdown Temperature | Shutdown, temperature increasing | — | 150 | — | ℃ |
| | | Reset, temperature decreasing | — | 120 | — | |

| | | | | | | |
|---|---|---|---|---|---|---|
| PSRR | | Vin=12V , Iout=10mA F=1Khz,Vout=5V | | 65 | | dB |
| $V_{ENH}$ | EN High level | Enabled | 1 | — | — | V |
| $V_{ENL}$ | EN Low level | Shutdown | — | — | 0.4 | V |

Note：(1) Dropout Voltage is the voltage difference between the input and the output at which the output voltage drops 2% below its nominal value.

## ■ Typical Performance Characteristics

Test Condition: $T_A$=25°C,Vin=12V,Iout=1mA,$C_{OUT}$=10uF, unless otherwise note

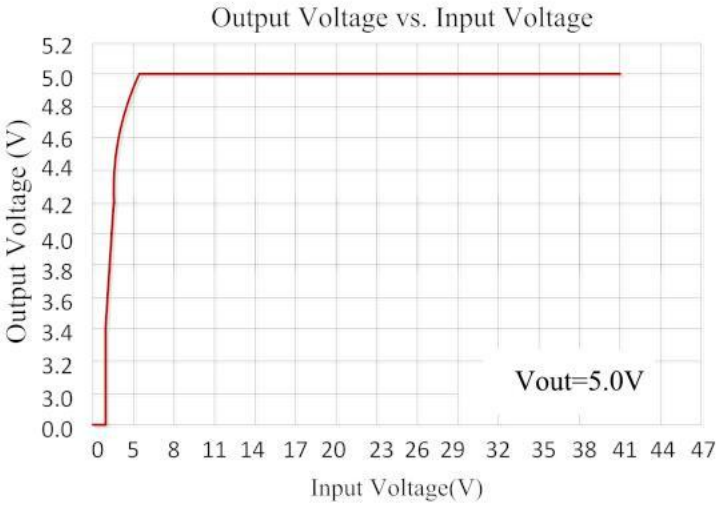


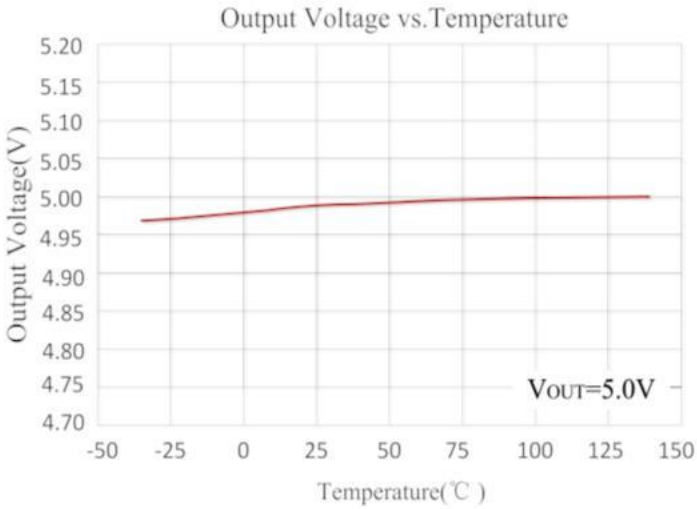


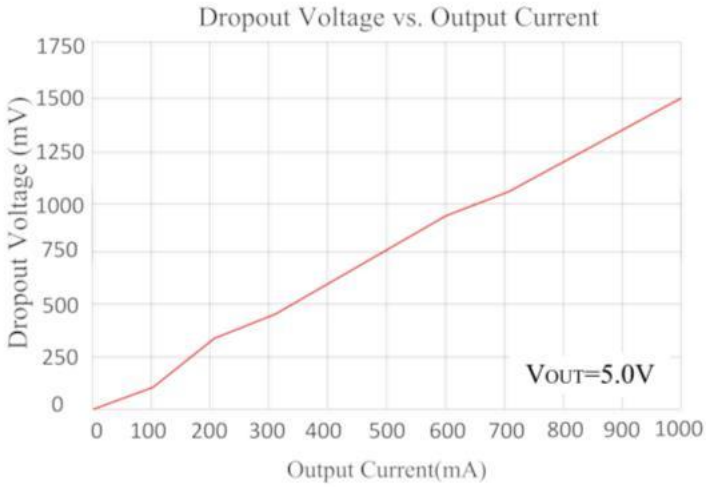


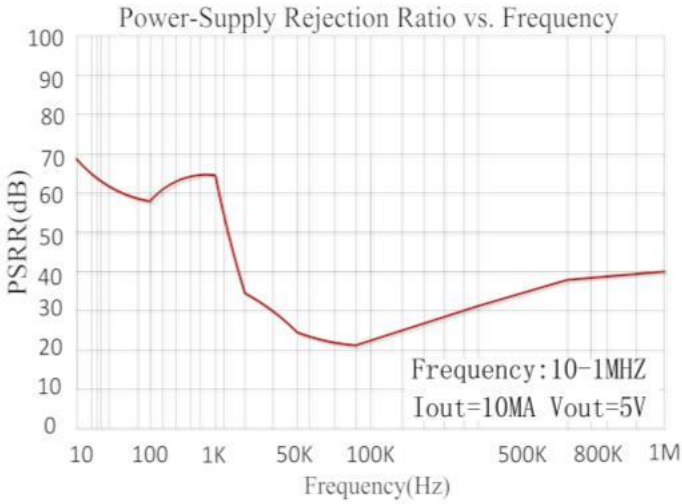

Line Transient Response

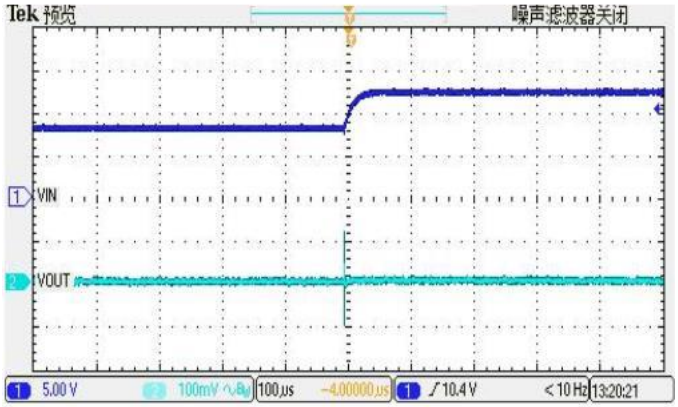


Line Transient Response

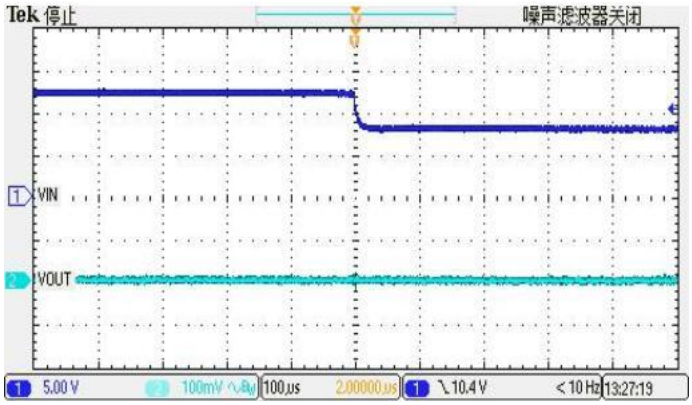


Load Transient Response

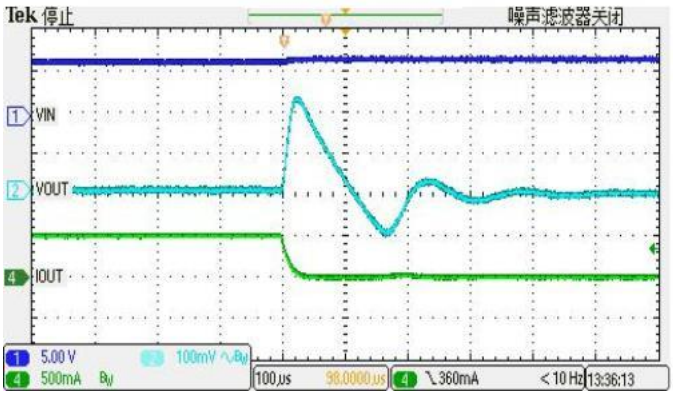


Load Transient Response

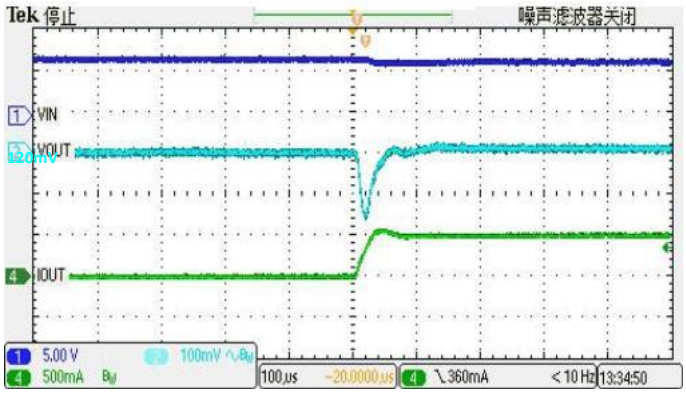


Start Up

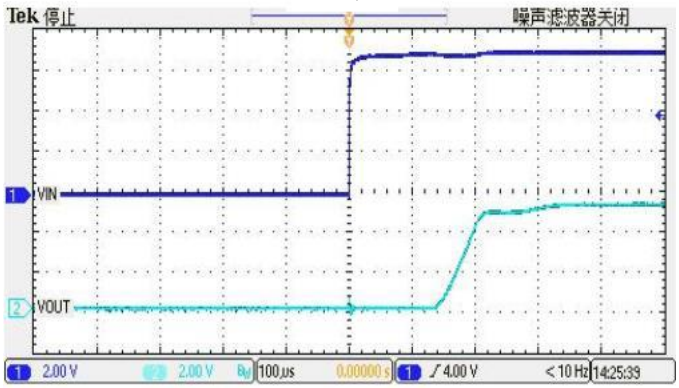


Start Up

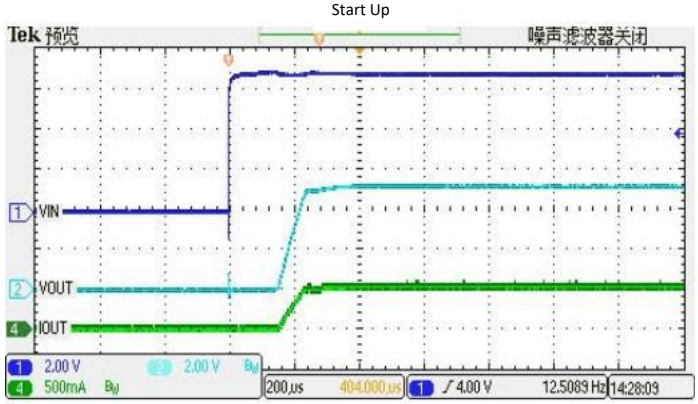


Short Circuit Protection

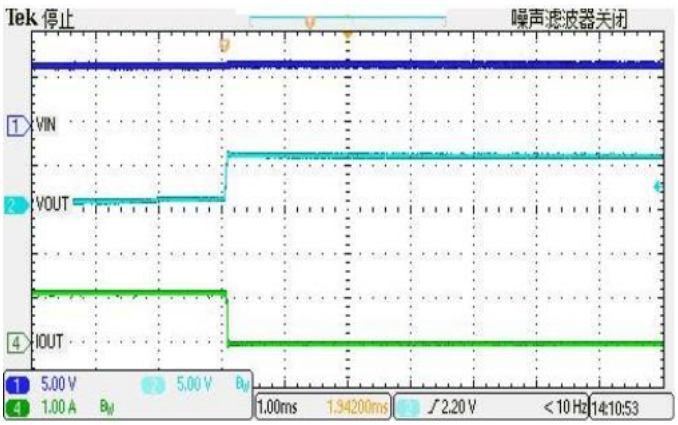


Short Circuit Protection

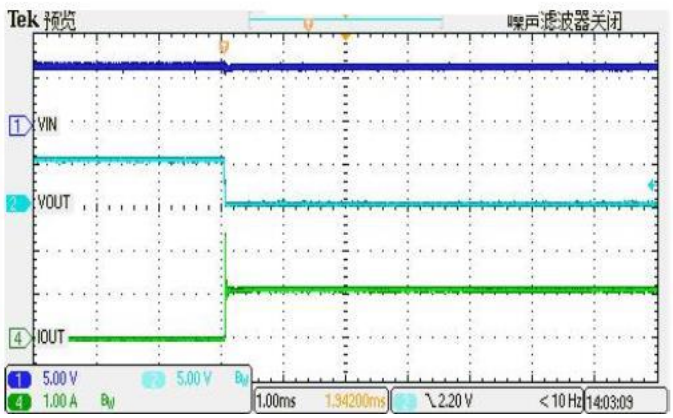

# ■ Functional Description

## ◆ Input Capacitor

A 1μF ceramic capacitor is recommended to connect between VIN and GND pins to decouple input power supply glitch and noise. The amount of the capacitance may be increased without limit. This input capacitor must be located as close as possible to the device to assure input stability and less noise. For PCB layout, a wide copper trace is required for both VIN and GND.

## ◆ Output Capacitor

An output capacitor is required for the stability of the LDO. The recommended minimum output capacitance is 10μF, ceramic capacitor is recommended, and temperature characteristics are X7R or X5R. Higher capacitance values help to improve load/line transient response. The output capacitance may be increased to keep low undershoot/overshoot. Place output capacitor as close as possible to VOUT and GND pins.

## ◆ EN Pin Operation

The ZCC541A/B is turned on by setting the EN pin to “H”. Since the EN pin is neither pulled down nor pulled up internally, do not set it in floating status. When the EN pin is not used, connect the EN pin with VIN to keep the LDO in operating mode.

## ◆ Current Limit and Short Circuit Protection

When output current at VOUT pin is higher than current limit threshold or the VOUT pin is direct short to GND, the current limit protection will be triggered and clamp the output current at a pre-designed level to prevent over-current and thermal damage.

## ◆ Thermal Protection

The ZCC541A/B has internal thermal sense and protection circuits. When excessive power dissipation happens on the device, such as short circuit at the output pin or very heavy load current with a large voltage drop across the device, the internal thermal protection circuit will be triggered, and it will shut down the power MOSFET to prevent the LDO from dam age. As soon as excessive thermal condition is removed and the temperature of the device drops down, the thermal protection circuit will lease the control of the power MOSFET, and the LDO device goes to normal operation.

## ■ Package Outline Dimensions

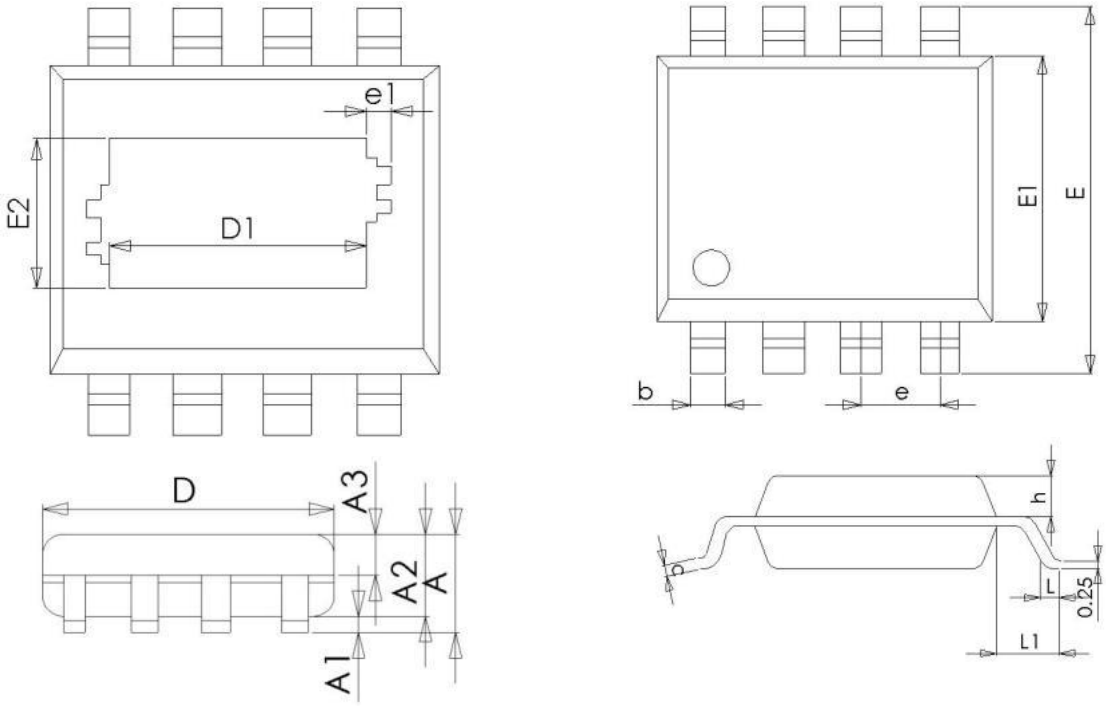


| Symbol | Dimensions In Millimeters | | |
|---|---|---|---|
| | Min | NOM | Max |
| A | -- | -- | 1.65 |
| A1 | 0.05 | -- | 0.15 |
| A2 | 1.30 | 1.40 | 1.50 |
| A3 | 0.60 | 0.65 | 0.70 |
| D | 4.70 | 4.90 | 5.10 |
| E | 5.80 | 6.00 | 6.20 |
| E1 | 3.70 | 3.90 | 4.10 |
| e | 1.27BSC | | |
| h | 0.25 | -- | 0.50 |
| L | 0.50 | 0.60 | 0.80 |
| L1 | 1.05BSC | | |

## ■ Packing Information

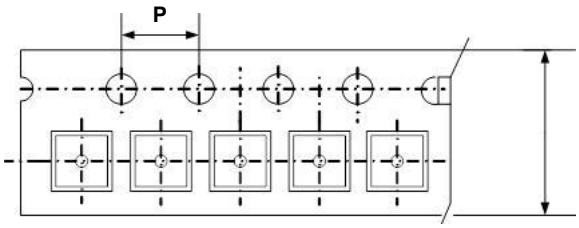


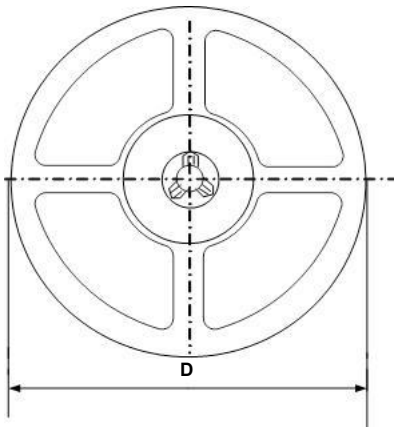


| Type | W(mm) | P(mm) | D(mm) | Qty (pcs) |
|---|---|---|---|---|
| ESOP8 | 12.0±0.1 mm | 8.0±0.1 mm | 330±1 mm | 2500pcs |

# TO220-3 Package Outline

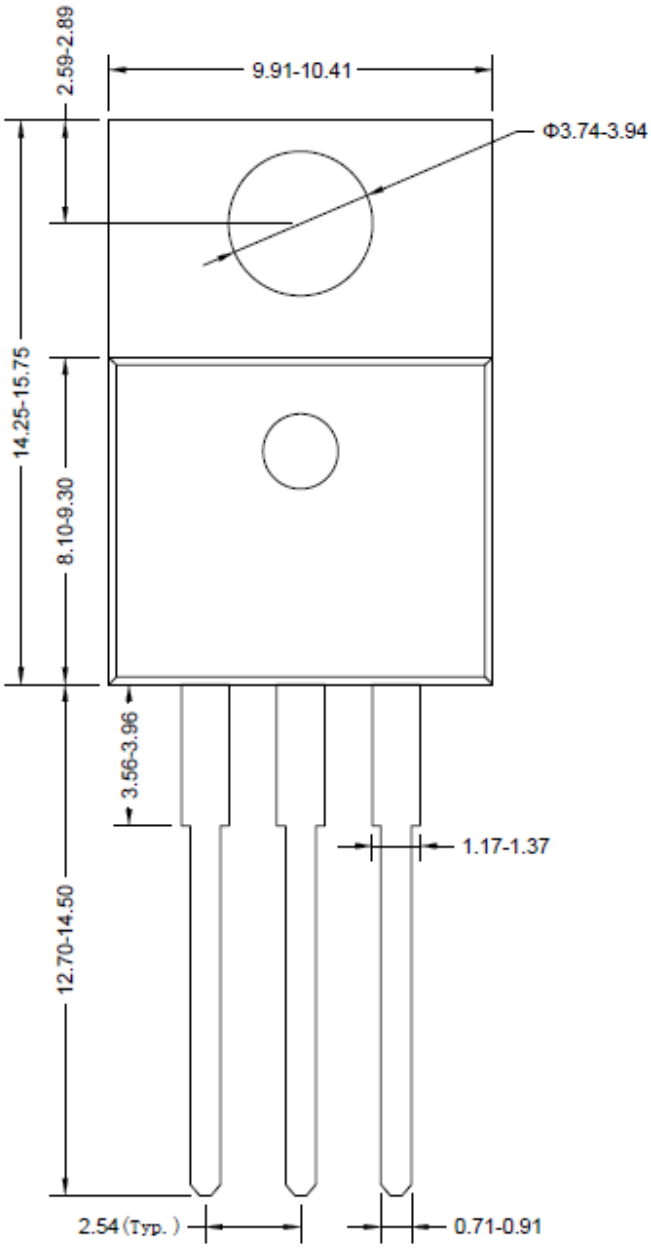


**Top view**

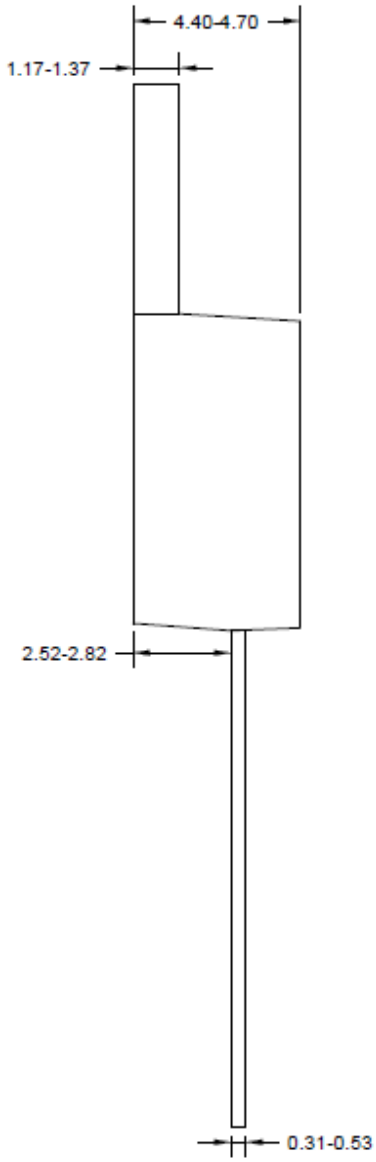


**Side view**