ZCC103

Low-Power, Digital Temperature Sensor With Two-Wire Interface in WCSP

1 Features

Multiple Device Access (MDA):
Global Read/Write Operations
I^2C™ and SMBus™-Compatible Interface
Resolution: 8 Bits

Accuracy: ±1°C Typical (–10°C to 100°C)
Low Quiescent Current:

3-µA Active I_Q at 0.25 Hz

1-µA Shutdown

Supply Range: 1.4 V to 3.6 V
Digital Output

2 Applications

- Handsets
- Notebooks
- SSDs
- Servers
- Telecom
- Set Top Boxes
- Low Power Environmental
- Sensors

3 Description

The ZCC103 is a digital output temperature sensor in a four-ball wafer chip-scale package (WCSP). The ZCC103 is capable of reading temperatures to a resolution of 1°C.

The ZCC103 features a two-wire interface that is compatible with both I^2C and SMBus interfaces. In addition, the interface supports multiple device access (MDA) commands that allow the master to communicate with multiple devices on the bus simultaneously, eliminating the need to send individual commands to each ZCC103 on the bus.

Up to eight ZCC103s can be tied together in parallel and easily read by the host. The ZCC103 is especially suitable for space-constrained, power-sensitive applications with multiple temperature measurement zones that must be monitored.

The ZCC103 is specified for operation over a temperature range of –40°C to 125°C

.**Device Information**(1)

PART NUMBER	PACKAGE	BODY SIZE (NOM)
ZCC103	DSBGA (4)	0.76 mm × 0.76 mm

(1) For all available packages, see the orderable addendum at the end of the data sheet.

Typical Application Diagram

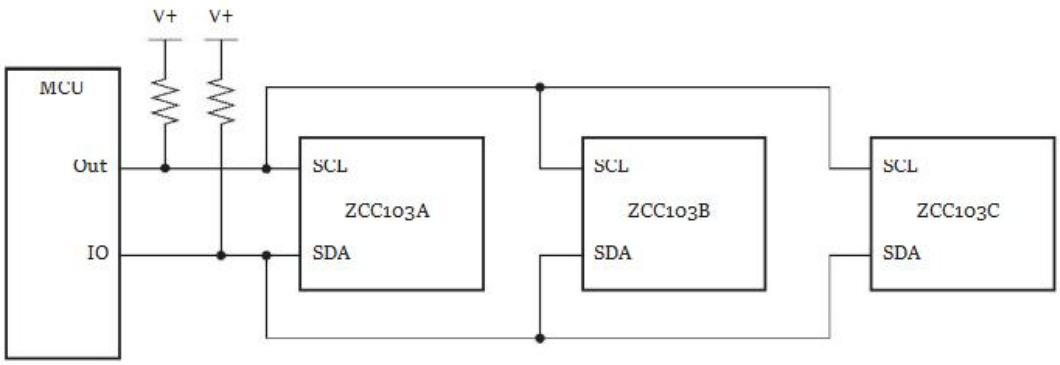

Table of Contents

1 Features ... 1
2 Applications ... 1
3 Description ... 1
4 Revision History ... 2
5 Pin Configuration and Functions ... 3
6 Specifications ... 3
6.1 Absolute Maximum Ratings ... 3
6.2 ESD Ratings ... 3
6.3 Recommended Operating Conditions ... 3
6.4 Thermal Information ... 4
6.5 Electrical Characteristics ... 4
6.6 Timing Requirements ... 5
6.7 Typical Characteristics ... 9
7 Detailed Description ... 10
7.1 Overview ... 10
7.2 Functional Block Diagram ... 10
7.3 Feature Description ... 11
7.4 Device Functional Modes ... 11
7.5 Programming ... 11
7.6 Register Maps ... 16
8 Application and Implementation ... 19
8.1 Application Information ... 19
8.2 Typical Application ... 19
9 Power Supply Recommendations ... 21
10 Layout ... 21
10.1 Layout Guidelines ... 21
10.2 Layout Example ... 21
11 Device and Documentation Support ... 22
11.1 Receiving Notification of Documentation Updates ... 22
11.2 Community Resources ... 22
11.3 Trademarks ... 22
11.4 Electrostatic Discharge Caution ... 22
11.5 Glossary ... 22
12 Mechanical, Packaging, and Orderable Information ... 22

4 Revision History

NOTE: Page numbers for previous revisions may differ from page numbers in the current version.

Changes from Revision C (October 2018) to Revision D	Page
• Changed input voltage maximum value in the Absolute Maximum Ratings table from: (V+) + 0.5) and ≤ 4 to (V+) + 0.3) and ≤ 4	3

Changes from Revision A (March 2011) to Revision B	Page
• Added *ESD Ratings* table, *Feature Description* section, *Device Functional Modes* section, *Application and Implementation* section, *Power Supply Recommendations* section, *Layout* section, *Device and Documentation Support* section, and *Mechanical, Packaging, and Orderable Information* section	1
• Added SSDs, Servers, Telecom, Set Top Boxes, Low Power Environmental, and Sensors to *Applications* section	1

Changes from Original (February 2011) to Revision A	Page

5 Pin Configuration and Functions

YFF Package
4-Ball DSBGA
Top View

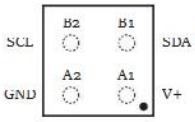

Pin Functions

PIN		I/O	DESCRIPTION
NO.	NAME		
A1	V+	I	Supply voltage
A2	GND	I	Ground
B1	SDA	I/O	Input/output data pin
B2	SCL	I	Input clock pin

6 Specifications

6.1 Absolute Maximum Ratings

over operating free-air temperature range (unless otherwise noted)[1]

		MIN	MAX	UNIT
V+	Supply voltage		4	V
	Voltage at SCL and SDA	−0.3	((V+) + 0.3) and ≤ 4	V
	Operating temperature	−55	150	°C
T_J	Junction temperature		150	°C
T_{stg}	Storage temperature	−60	150	°C

6.2 ESD Ratings

		VALUE	UNIT
$V_{(ESD)}$ Electrostatic discharge	Human body model (HBM), per ANSI/ESDA/JEDEC JS-001, all pins[1]	±2000	V
	Charged device model (CDM), per JEDEC specification JESD22-C101, all pins[2]	±1000	
	Machine model (MM)	±200	

(1) JEDEC document JEP155 states that 500-V HBM allows safe manufacturing with a standard ESD control process.
(2) JEDEC document JEP157 states that 250-V CDM allows safe manufacturing with a standard ESD control process.

6.3 Recommended Operating Conditions

over operating free-air temperature range (unless otherwise noted)

		MIN	MAX	UNIT
V+	Supply voltage	1.4	3.6	V
T_A	Operating free-air temperature	−40	125	°C

6.4 Thermal Information

THERMAL METRIC[1]		ZCC301 YFF (DSBGA) 4 BALLS	UNIT
$R_{\theta JA}$	Junction-to-ambient thermal resistance	160	°C/W
$R_{\theta JC(top)}$	Junction-to-case (top) thermal resistance	75	°C/W
$R_{\theta JB}$	Junction-to-board thermal resistance	76	°C/W
ψ_{JT}	Junction-to-top characterization parameter	3	°C/W
ψ_{JB}	Junction-to-board characterization parameter	74	°C/W

6.5 Electrical Characteristics

at T_A = 25°C and V_+ = 1.4 V to 3.6 V (unless otherwise noted)

PARAMETER		TEST CONDITIONS	MIN	TYP	MAX	UNIT
TEMPERATURE INPUT						
	Range		–40		125	°C
	Accuracy (temperature error)	–10°C to 100°C, V_+ = 1.8 V	–2	0	2	°C
		–40°C to 125°C, V_+ = 1.8 V	–3	±1	3	
		vs supply	–0.5	±0.2	0.5	°C/V
	Resolution			1		°C
DIGITAL INPUT/OUTPUT						
V_{IH}	Input logic levels		0.7 (V_+)		V_+	V
V_{IL}			–0.5		0.3 (V_+)	
I_{IN}	Input current	0 < V_{IN} < (V_+) + 0.3 V			1	µA
V_{OL} SDA	Output logic levels	V_+ > 2 V, I_{OL} = 2 mA	0		0.4	V
		V_+ < 2 V, I_{OL} = 2 mA	0		0.2 (V_+)	
	Resolution			8		Bit
	Conversion time			26	35	ms
	Conversion modes	CR1 = 0, CR0 = 0 (default)		0.25		Conv/s
		CR1 = 0, CR0 = 1		1		
		CR1 = 1, CR0 = 0		4		
		CR1 = 1, CR0 = 1		8		
	Timeout time			30	40	ms
POWER SUPPLY						
	Operating supply range		1.4		3.6	V
I_Q	Quiescent current	Serial bus inactive, CR1 = 0, CR0 = 0 (default), V_+ = 1.8 V		1.5	3	µA
		Serial bus active, SCL frequency = 400 kHz		15		
		Serial bus active, SCL frequency = 3.4 MHz		85		
I_{SD}	Shutdown current	Serial bus inactive, V_+ = 1.8 V		0.5	1	µA
		Serial bus active, SCL frequency = 400 kHz		10		
		Serial bus active, SCL frequency = 3.4 MHz		80		
TEMPERATURE						
	Specified range		–40		125	°C
	Operating range		–55		150	°C

6.6 Timing Requirements

See [1]

		FAST MODE		HIGH-SPEED MODE		UNIT
		MIN	MAX	MIN	MAX	
$f_{(SCL)}$	SCL operating frequency, V_S > 1.7 V	0.001	0.4	0.001	3.4	MHz
$f_{(SCL)}$	SCL operating frequency, V_S < 1.7 V	0.001	0.4	0.001	2.75	MHz
$t_{(BUF)}$	Bus free time between STOP and START condition	600		160		ns
$t_{(HDSTA)}$	Hold time after repeated START condition. After this period, the first clock is generated.	100		100		ns
$t_{(SUSTA)}$	Repeated START condition setup time	100		100		ns
$t_{(SUSTO)}$	STOP condition setup Time	100		100		ns
$t_{(HDDAT)}$	Data hold time	20	400	10	125	ns
$t_{(SUDAT)}$	Data setup time	100		10		ns
$t_{(LOW)}$	SCL clock low period, V_S > 1.7 V	1300		160		ns
$t_{(LOW)}$	SCL clock low period, V_S < 1.7 V	1300		200		ns
$t_{(HIGH)}$	SCL clock high period	600		60		ns
t_F	Clock/data fall time		300			ns
t_R	Clock/data rise time		300		160	ns
t_R	Clock/data rise time for SCLK ≤ 100 kHz		1000			ns

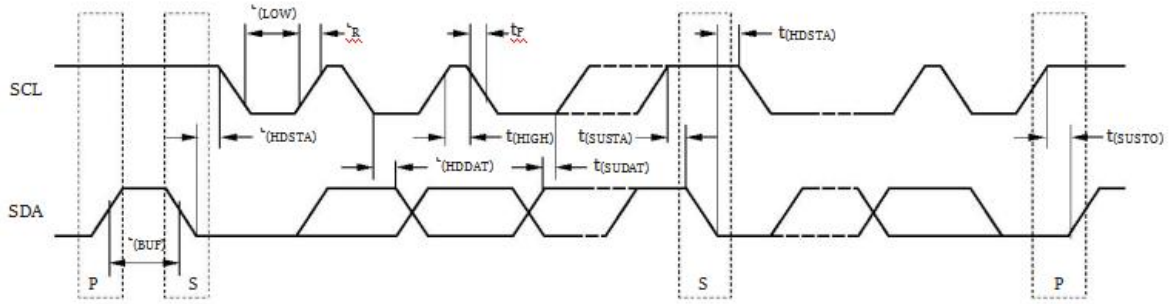

NOTE: P = STOP, S = START.

Figure 1. Two-Wire Timing Diagram

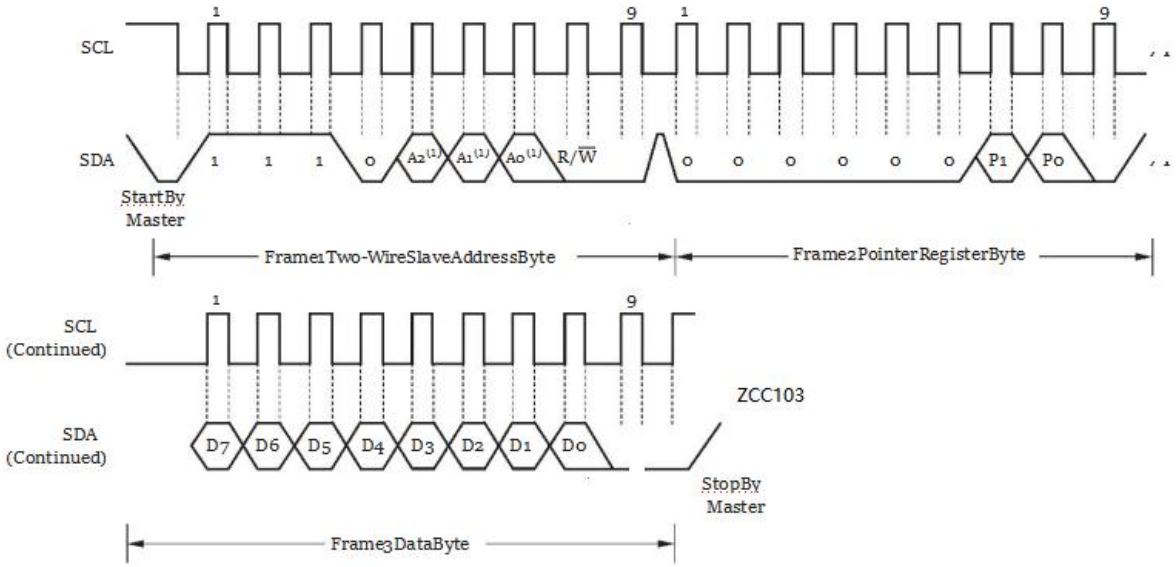

(1) The value of A0, A1, and A2 are determined by the ZCC103 version; see Table 2.

Figure 2. Two-Wire Timing Diagram for Write Word Format

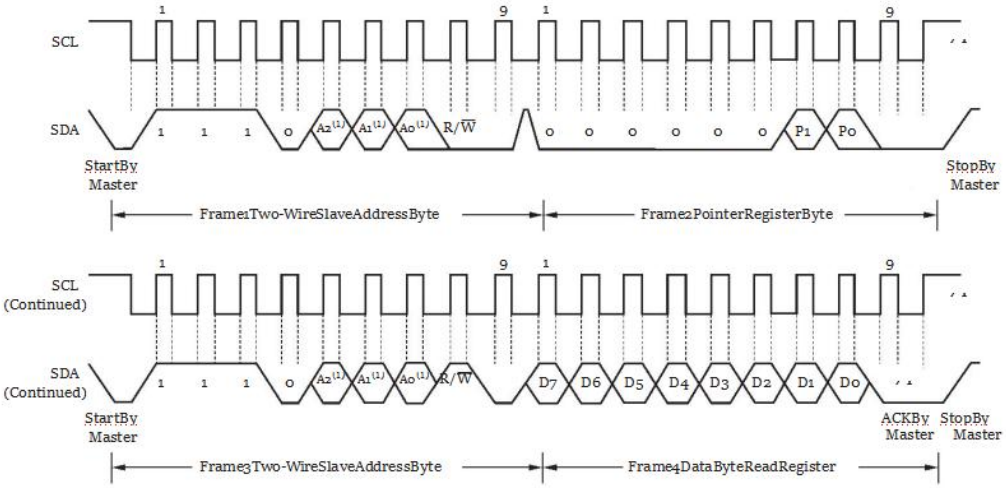

(1) The value of A0, A1, and A2 are determined by the version; see Table 2.

Figure 3. Two-Wire Timing Diagram for Read Word Format

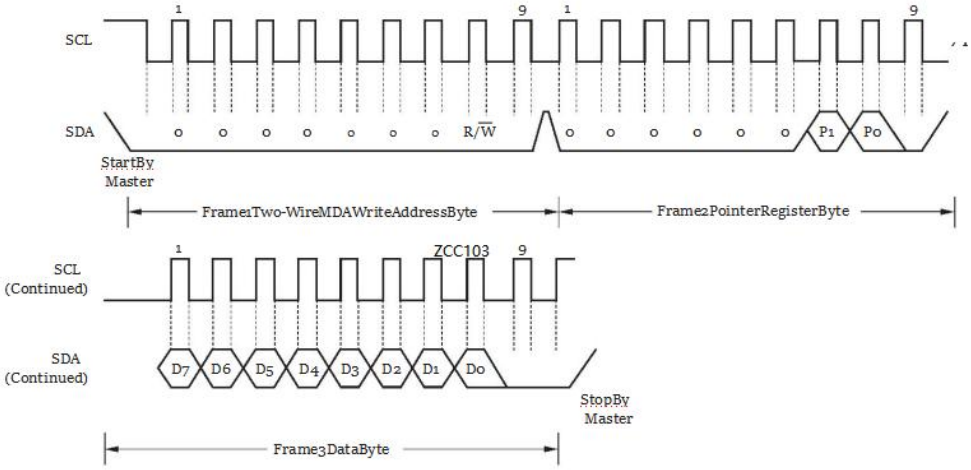

(1) All ZCC103 devices on the bus acknowledge the byte.

Figure 4. Two-Wire Timing Diagram MDA Write Word Format

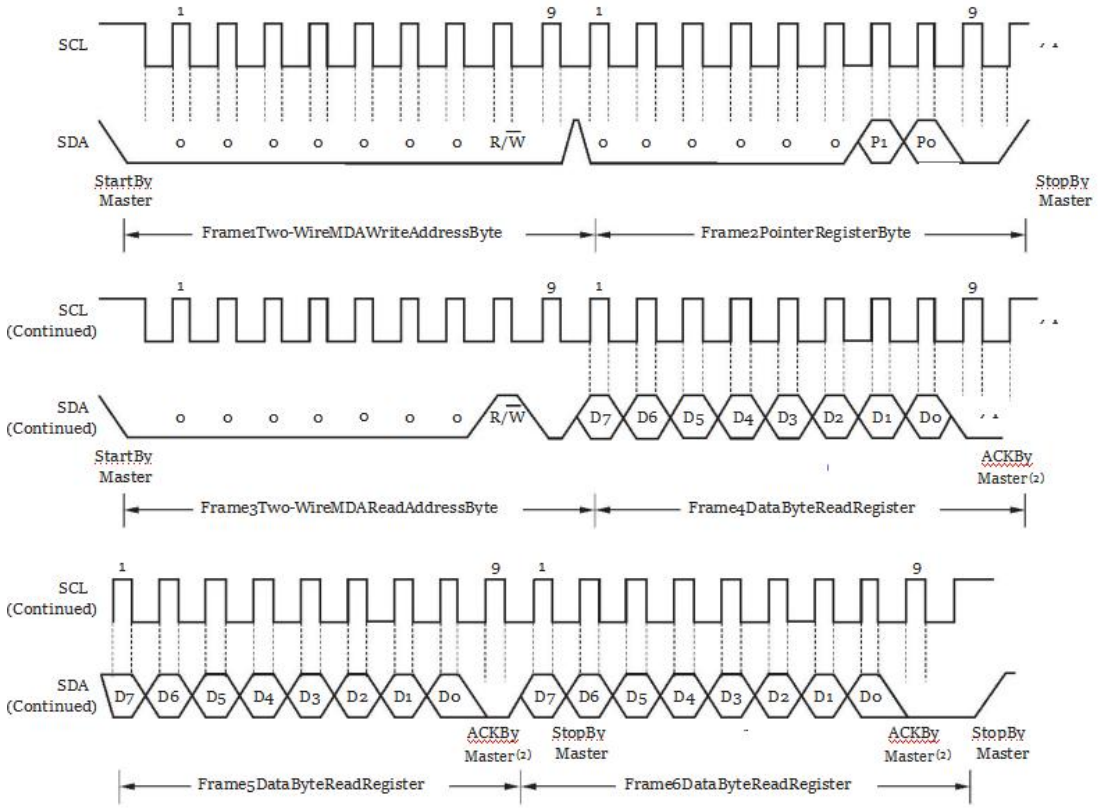

(1) All ZCC103 devices on the bus acknowledge the byte.

(2) The master must issue an acknowledge for each byte read to read all of the ZCC103 devices on the bus.

(3) Three ZCC103 devices used in this case; up to eight devices can be used (see Table 2).

Figure 5. Two-Wire Timing Diagram MDA Read Word Format Using Figure 16 (Typical Application)

6.7 Typical Characteristics

At TA = 25° C and V+ = 1.8 V, unless otherwise noted.

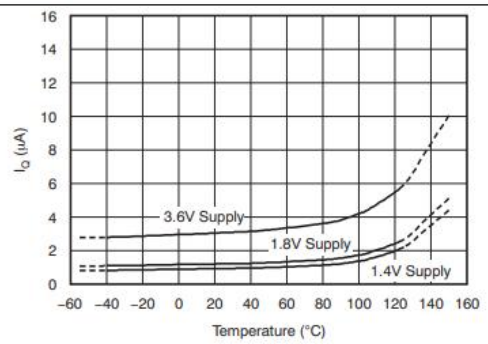

Figure 6. Quiescent Current vs Temperature (0.25 Conversions Per Second)

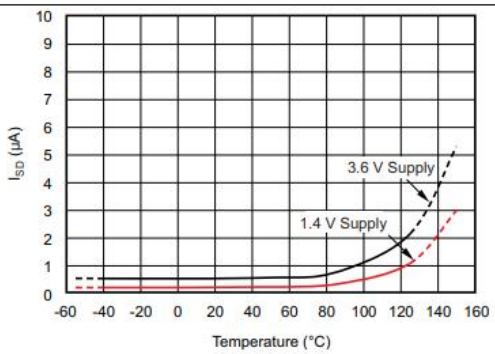

Figure 7. Shutdown Current vs Temperature

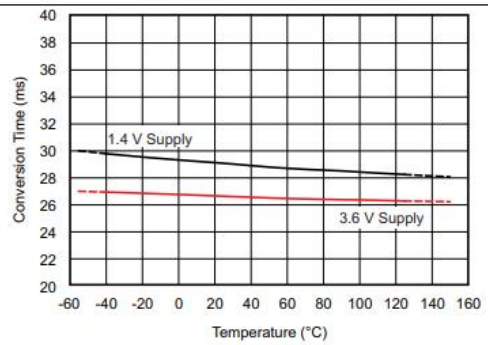

Figure 8. Conversion Time vs Temperature

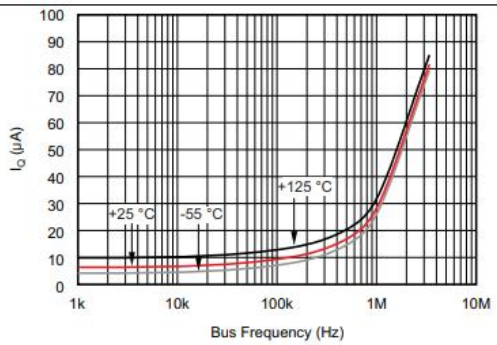

Figure 9. Quiescent Current vs Bus Frequency (Temperature at 3.3-V Supply)

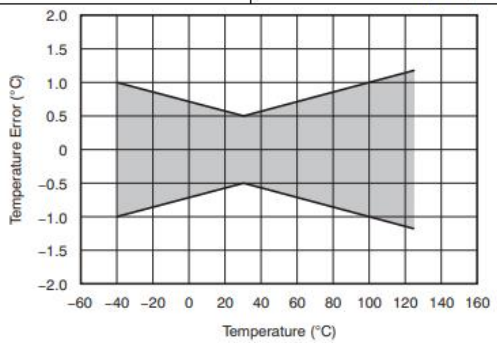

Figure 10. Temperature Error vs Temperature

7.3 Feature Description

The ZCC103 is a 1° C resolution digital output temperature sensor offered in a four-ball wafer chip-scale package(WCSP). The ZCC103 features a two-wire interface that is compatible with both I2C and SMBus interfaces.

The serial interface supports multiple device access (MDA) commands that allow the master to communicate with multiple devices on the bus simultaneously, eliminating the need to send individual commands to each ZCC103 device on the bus. Up to eight ZCC103 devices can be tied together in parallel and easily read by the host.

The ZCC103 is an ideal choice for space-constrained and power-sensitive applications with multiple temperature measurement zones to be monitored.

7.4 Device Functional Modes

7.4.1 Shutdown Mode

Shutdown mode saves maximum power by shutting down all device circuitry other than the serial interface, reducing current consumption to typically less than 0.5 μA. For details on how to enter shutdown mode, see Shutdown Mode (M1 = 0, M0 = 0) in Programming.

7.4.2 One-Shot Mode

The ZCC103 features a One-Shot Temperature Measurement mode. When the device is in Shutdown mode, the device can be instructed to complete a one-time temperature measurement before returning to the shutdown state. This feature is useful for reducing power consumption in the ZCC103 when continuous temperature monitoring is not required.As a result of the short conversion time, the ZCC103 can achieve a higher conversion rate. A single conversion typically takes 26 ms and a read can take place in less than 20 μs. When using One-Shot mode, 30 or more conversions per second are possible. For details on how to enter One-Shot mode, see One-Shot (M1 = 0, M0 = 1) in Programming.

7.4.3 Continuous Conversion Mode

In Continuous Conversion mode, the ZCC103 performs temperature conversion at a rate determined by the conversion rate bits (CR1 and CR0) set in the configuration register. Because the actual temperature conversion takes only 26 mS, the ZCC103 powers down in between conversions and waits for the appropriate delay. For details on how to enter One-Shot mode, see Continuous Conversion Mode (M1 = 1) and Conversion Rate in Programming.

7.5 Programming

7.5.1 Temperature Watchdog Function

The ZCC103 contains a watchdog function that monitors device temperature and compares the

result to the values stored in the temperature limit registers (THIGH and TLOW) to determine if the device temperature is within these set limits. If the temperature of the ZCC103 becomes greater than the value in the THIGH register, then the flag-high bit (FH) in the configuration register is set to 1. If the temperature falls below the value in the TLOW register, then the flag-low bit (FL) is set to 1. If both flag bits remain 0, then the temperature is within the temperature window set by the temperature limit registers, as shown in Figure 12.

Programming (continued)

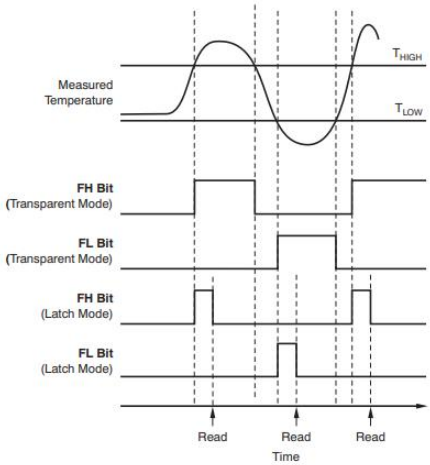

Figure 12. Temperature Flag Functional Diagram

TAPE AND REEL INFORMATION

REEL DIMENSIONS

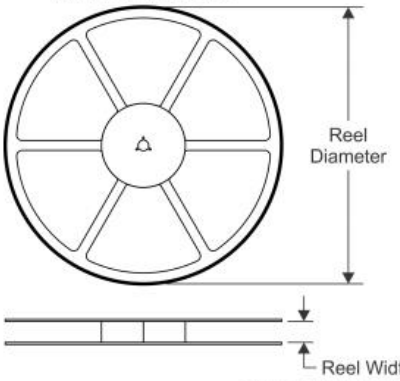

TAPE DIMENSIONS

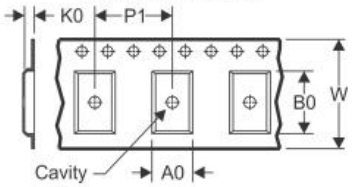

A0	Dimension designed to accommodate the component width
B0	Dimension designed to accommodate the component length
K0	Dimension designed to accommodate the component thickness
W	Overall width of the carrier tape
P1	Pitch between successive cavity centers
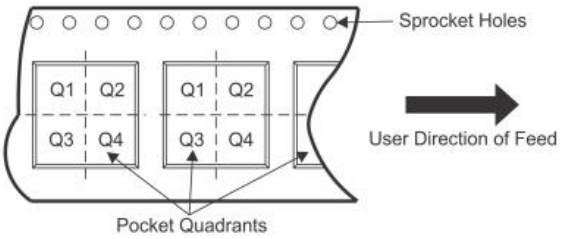
QUADRANT ASSIGNMENTS FOR PIN 1 ORIENTATION IN TAPE