ZCC3302

7V 1.5A 1.25MHz Step-up 10 White LED Driver

GENERAL DESCRIPTION

The ZCC3302 is a 7.5V step-up DC/DC converter designed for driving up to single 10-series or 9x3-series WLEDs from a single cell Lithium Ion-battery.

The ZCC3302 uses current mode, fixed frequency architecture to regulate the LED current, which is measured through an external current sense resistor. Its low 300mV feedback voltage reduces power loss and improves efficiency. The ZCC3302 supports high frequency PWM Dimming through EN pin.

The ZCC3302 is turned off if an open-circuit condition is presented. Please be noted that open-circuit condition is not the same as over-voltage condition.. Please refer to the OPERATION DESCRIPTION and APPLICATION INFORMATION sections for more detail.

The ZCC3302 includes soft-start, under-voltage lockout, current limiting and thermal overload protections.

The ZCC3302 is available in SOT23-6 package.

FEATURES

- Operating Voltage: 2.5-7.5V
- Maximum Output Voltage: 35V, capable of driving 10-series White LED strings
- Maximum drive Capability: 9x3-series or 6x6-series.
- Up to 90% Efficiency
- 1.25MHz Fixed Switching Frequency
- Low 300mV Feedback Voltage
- Support PWM Dimming
- Open-circuit Protection
- UVLO, Soft-Start and Thermal Shutdown
- Internal 1.5A Current Limit
- SOT23-6 Package

APPLICATIONS

- 5~7” LCD Panels
- Handheld Computers and PDAs
- Digital Cameras
- Small LCD Displays

TYPICAL APPLICATION CIRCUIT

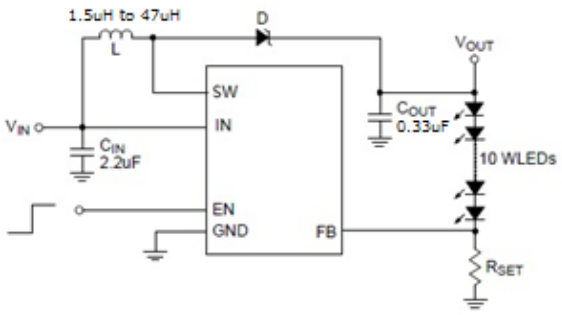

PIN ASSIGNMENT

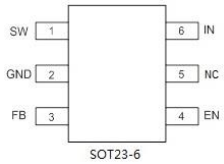

ORDER INFORMATION

FULL CODE	ZCC3302S23Fx S23F: Package Type, S23F=SOT23-6 x: Package Material Option, 1=Copper Wire
PACKAGE OPTION	TAPE & REEL, 3000EA/REEL

PIN DESCRIPTION

PIN NO	SYMBOL	DESCRIPTTION
1	SW	Power Switch Output.
2	GND	Ground
3	FB	Feedback input.
4	EN	Chip Enable.
5	NC	Not Connected.
6	IN	Power Supply Input.

ABSOLUTE MAXIMUM RATINGS (Note 1)

SYMBOL	ITEMS	VALUE	UNIT
V_{IN}	Input Voltage	-0.3～8	V
V_{SW}	Voltage at SW Pin	-0.5～40	V
V_{IO}	All Other I/O Pins	GND-0.3 to VIN+0.3	V
P_D	Maximum Power Dissipation	0.6	W
P_{TR1}	Thermal Resistance，SOT23-6, Θ_{JA}	220	℃/W
PTR2	Thermal Resistance，SOT23-6, ΘJC	130	℃/W
T_J	Junction Temperature	-40~125	℃
Tstg	Storage Temperature	-55 to 150	℃
Tsolder	Package Lead Soldering Temperature	260℃, 10s	

Note 1: Absolute Maximum Ratings indicate limits beyond which damage to the device may occur. Recommended Operating Range indicates conditions for which the device is functional, but do not guarantee specific performance limits. Electrical Characteristics state DC and AC electrical specifications under particular test conditions which guarantee specific performance limits. This assumes that the device is within the Operating Range. Specifications are not guaranteed for parameters where no limit is given, however, the typical value is a good indication of device performance.

RECOMMANDED OPERATING RANGE

SYMBOL	ITEMS	VALUE	UNIT
V_{IN}	VIN Supply Voltage	2.5 to 7.5	V
V_{SW}	Output Voltage	V_{IN} to 35	V
T_{OPT}	Operating Temperature	-40 to +85	℃

ELECTRICAL CHARACTERISTICS

The following specifications apply for V_{IN}= V_{EN} =3.6V T_A=25 ^oC, unless specified otherwise.

SYMBOL	ITEMS	CONDITIONS	MIN	TYP	MAX	UNIT
V_{IN}	Input Voltage		2.5		7.5	V
V_{UVLO}	Under-Voltage Lock-Out	V_{IN} rising		2.45		V
V_{UVLOR}	UVLO Hysterisis	V_{IN} falling		200		mV
V_{FB}	FB Pin Voltage		291	300	309	mV
I_{FB}	FB Pin Input Bias Current			0.1	1	µA
I_Q	Quiescent Current	V_{FB}=0.4V		200	250	µA
I_{SHDN}	Shutdown Current	V_{EN} =0V		0.1	1	µA
F_{SW}	Switching Frequency			1.25		MHz
D_{MAX}	Maximum Duty Cycle	V_{FB}=0.1V	92	95		%
F_{DIM}	PWM Dimming frequency		0.1		200	KHz
D_{DIM}	PWM Dimming Duty Cycle		10%		100%	
V_{EN_H}	EN Minimum High Level		1.5			V
V_{EN_L}	EN Maximum Low Level				0.4	V
I_{EN}	EN Input Bias Current			0.1	1	µA
R_{ON}	SW On Resistance			0.45		Ω
I_{LIMIT}	SW Current Limit			1.5		A
I_{LEAK}	SW Leakage Current	V_{SW-ON} =0V, 3.6V		0.1	1	µA
V_{OVP}	Open Circuit Shutdown Threshold	V_{OUT} Rising		35		V
T_{SS}	Soft Start Time	V_{IN} Power On		800		µS
TSD	Thermal Shutdown Temperature			160		˚C
T_{SDHYS}	Thermal Shutdown Hysterisis			20		˚C

SIMPLIFIED BLOCK DIAGRAM

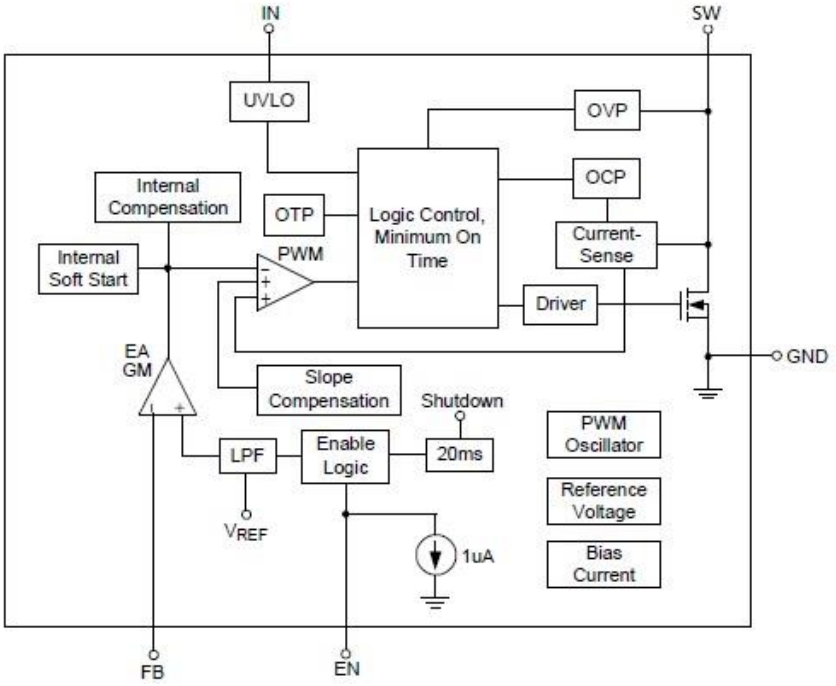

OPERATION DESCRIPTIONS

The ZCC3302 uses a constant-frequency current-mod e boost converter architecture to control the LED current by regulating the feedback voltage. Please refer to the functional block diagram above for an explanation of ZCC3302 operation. The beginning of each cycle turns on the Power MOSFET. A slope compensation ramp is added to the output of the current sense amplifier and the result is fed into the positive input of the comparator. When this voltage goes above the output voltage of the error amplifier, the Power MOSFET is turned off. The voltage at the output of the EAGM block amplifies the difference between the reference voltage and the feedback voltage, so that FB voltage can be regulated to the reference voltage.

The ZCC3302 has built-in soft-start to limit the inrus h current during startup and to limit the amount of overshoot on the output. Protection features in t he ZCC3302 include open-circuit protection (O CP), cycle-by-cycle current limit protection and thermal shutdown.

Open-circuit occurs when LED strings are not connected or an LED in the string fails open. In this situation VFB is forced to zero, so the boost converter operates in maximum duty cycle mode and ramps up the output voltage beyond the limits and causes damage to external devices or the device itself. Open-circuit Protection function stops operating as soon as the output voltage arrives the threshold voltage, VOCP, thus leading VOUT falls to nearby VIN. The ZCC3302 does not resume automatically at the removal of the open-circuit condition unless it is power reset or reset through EN pin.

Please be noted that in order to immune misjudge of OCP the device checks both VOUT and VFB, and only trigger the OCP when VOUT>VOCP AND VFB<100mV. This would limit the use of dimming through FB pin.

TYPICAL OPERATING CHARACTERISTICS

Tested under TA=25°C, unless otherwise specified

1. Efficiency

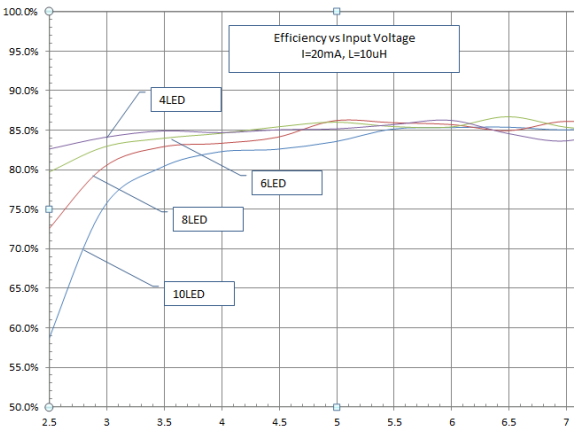

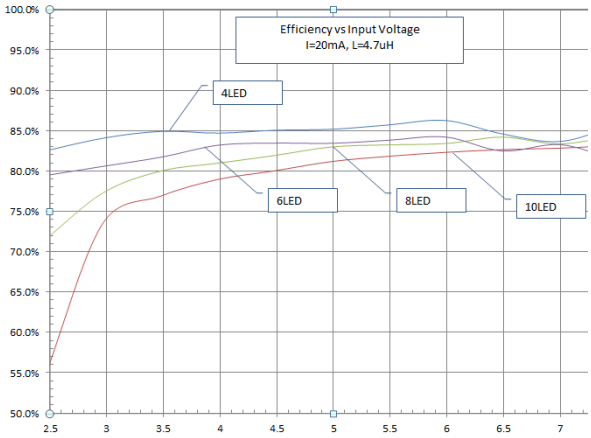

2. IQ and Frequency

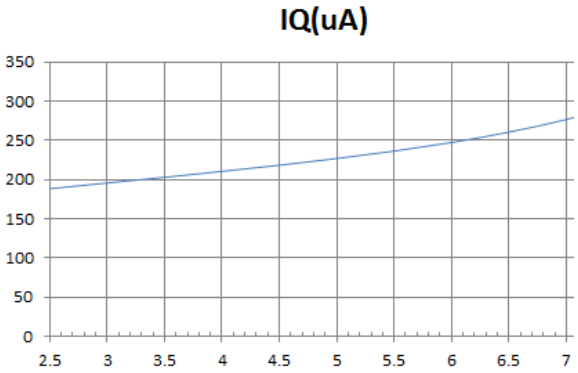

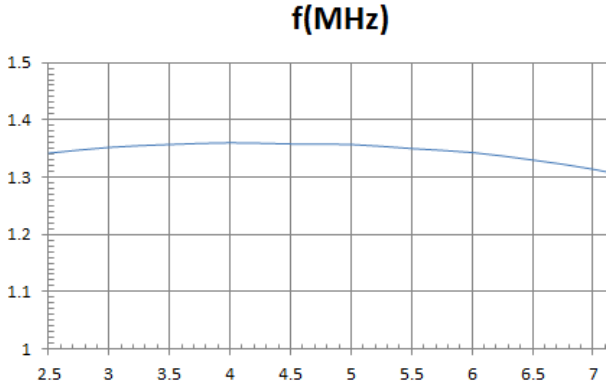

3. Operating Waveform

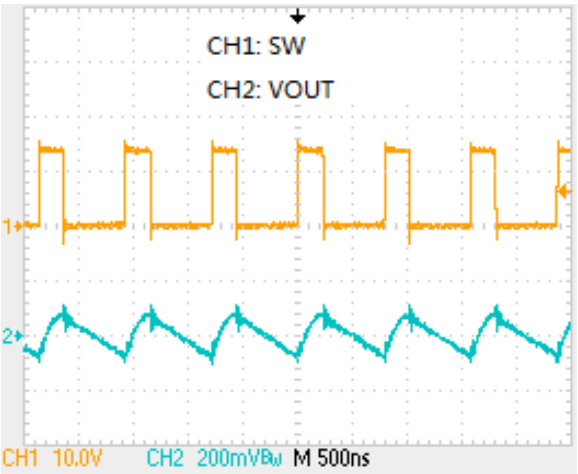

4. Start-up Waveform

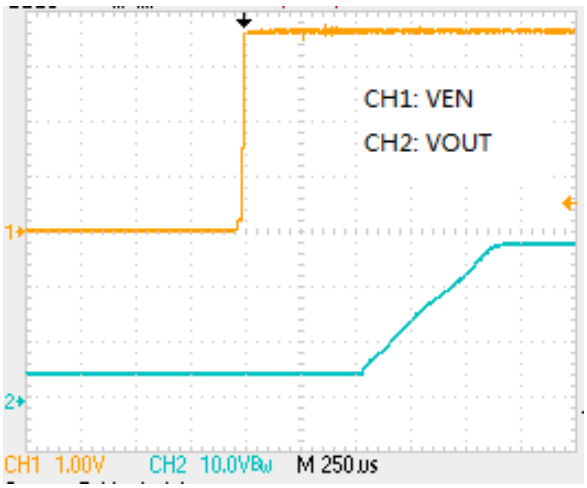

5. Disable Waveform

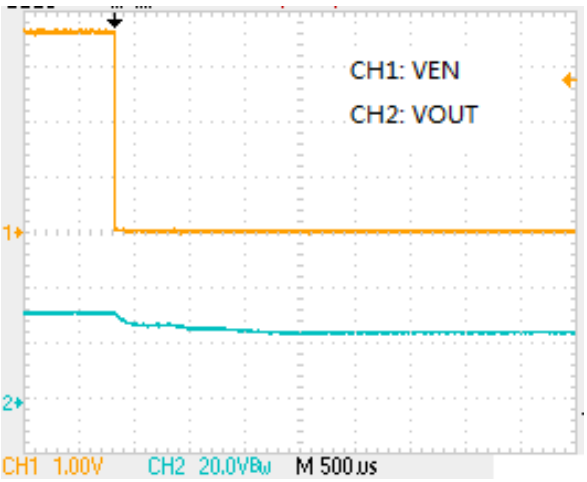

6. OVP Waveform

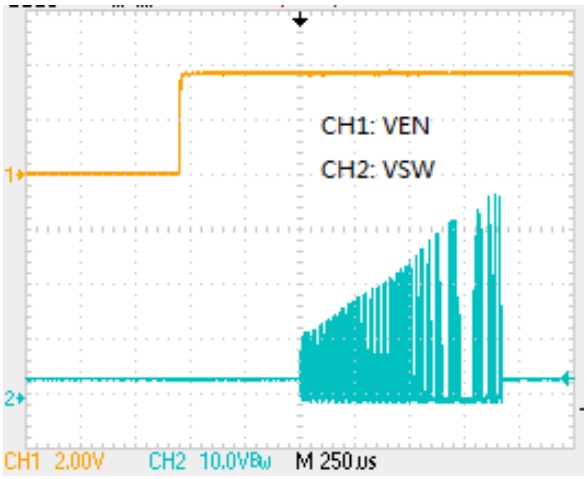

7. Dimming

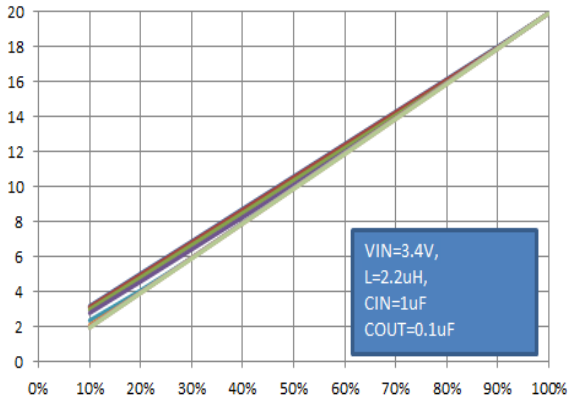

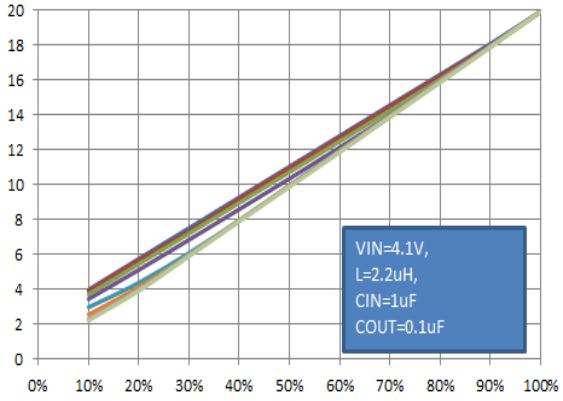

8. VEN vs VIN

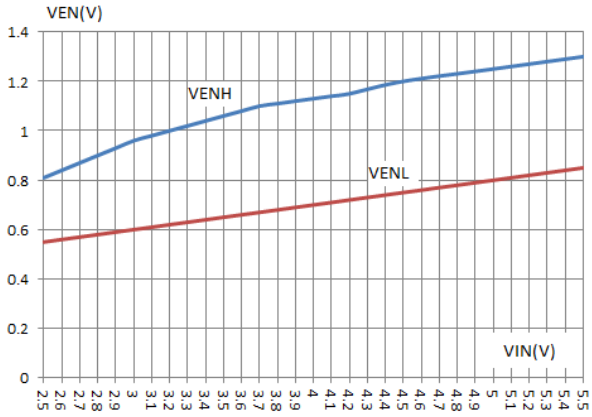

APPLICATION INFORMATION

- **Inductor Selection**

A 1.5 ~47 μ H inductor is recommended for 10/8/6-Series LED applications and 3seriesx9 LED applications. Small size and better efficiency are the major concerns for portable devices, such as mobile phones. If high efficiency is a critical requirement, a low DCR inductor should be selected. The inductor's saturation current rating should also exceed the peak input current, especially for high load current application.

- **Capacitor Selection**

Small size ceramic capacitors are ideal for ZCC3302 application. A 4.7uF input capacitor and a 0.47uF output capacitor are suggested for 10/8/6-Series LED applications. For high output current applications, larger value output capacitors like 2.2uF is recommended to minimize output ripple. For better voltage filtering, ceramic capacitors with low ESR are recommended.

- **Diode Selection**

Using a schottky diode is recommended in ZCC3302 applications because of its low forward voltage drop and fast reverse recovery time. The current rating of the schottky diode should exceed the peak current of the boost converter. The voltage rating should also exceed the target output voltage.

- **LED Current Setting**

LED current is determined by the feedback resistor (R1 in Figure 1 and Figure 2 above). The feedback voltage is internally set at 300mV. The LED current is programmed according to the formula I=300mV/R1. For accurate LED current settings, precision 1% resistors are recommended. The formula and table for R1 selection are shown below:

$$R1 = 300mV/I_{LED}$$

- **LED Dimming Control**

Below LED dimming control methods are all available for the ZCC3302, but special attention must be paid to some of them.

1. Low frequency (<=2KHz) PWM Signal through EN Pin

With a low frequency PWM signal applied to the EN pin, the ZCC3302 is correspondingly turned ON or OFF by the PWM signal. The LEDs alternate between zero and full programmed current. The average LED current increases proportionally with the duty cycle of the PWM signal. Please be noted the linearity is not satisfactory for small duty cycle, thus it is recommended to limit minimum duty cycle to 10%.

2. High frequency (>=3KHz) PWM Signal through EN pin

This is most recommended dimming method for the ZCC3302. The typical frequency range is 3KHz to 200KHz. Different to the low frequency PWM dimming method, high frequency PWM dimming doesn't disable and reset the device periodically. Rather, it integrates the PWM signal to a DC voltage and use the voltage to adjust the internal reference voltage. In this way the LED keeps lighting but the current varies. By this method excellent linearity is obtained even at small duty cycle. However, due to internal offset and noise, the minimum duty cycle is suggested to be not lower than 10% in order to obtain-expected result.

3. Variable DC Voltage or a Filtered PWM Signal through FB pin

This method is not recommended as they may invalidate the OCP function of the ZCC3302.

- **Power Sequence**

In order to make sure the device start to operate at the target supply voltage, the input voltage should be ready before EN pulls high.

- **Soft-Start**

The function of soft-start is made for suppressing the inrush current to an acceptable value at the beginning of power on. The ZCC3302 provides a built-in soft-start function by clamping the output voltage of error amplifier so that the duty cycle of the PWM will be increased gradually in the soft-start period.

- **Current Limiting**

The current flow through inductor as charging period is detected by a current sensing circuit. As the value comes across the current limiting threshold, the N-MOSFET will be turned off so that the inductor will be forced to leave charging stage and enter discharging stage. Therefore, the inductor current will not increase over the current limiting threshold.

- **Thermal Considerations**

For continuous operation, do not exceed absolute maximum operation junction temperature. The maximum power dissipation depends on the thermal resistance of IC package, PCB layout, the rate of surroundings airflow and temperature difference between junction to ambient..

- **OCP**

The Open-Circuit Protection is detected by sensing both the voltage on SW node and on FB node. Once VSW goes over the threshold voltage (VOCP) and VFB<100mV, the device stops operating. Whenever it enters into the OCP status, the device doesn't resume automatically on the removal of the open circuit condition. POWER RESET or RESET through EN pin is the only way to let the ZCC3302 work again.

- **UVLO**

If VIN drops below the UVLO Voltage, the UVLO circuit inhibits switching. Once VIN rises above the UVLO Voltage, the UVLO clears, and the soft-start sequence activates.

- **OTP**

As the die temperature is higher than 160℃, the chip also will enter protection mode. The power MOSFET will be turned off during protection mode to prevent abnormal operation.

- **Layout Considerations**

PCB layout is very important for high frequency switching regulators in order to keep the loop stable and minimize noise. For best performance of the ZCC3302, the following guidelines must be strictly followed.

- Input and Output capacitors should be placed close to the IC and connected to ground plane to reduce noise coupling.
- The GND pin should be connected to a strong ground plane for heat sinking and noise protection.
- Keep the main current traces as possible as short and wide.
- The SW node is with high frequency voltage swing. It should be kept in a smallest area.
- Place the feedback components (on FB pin) as close as possible to the IC and keep away from the noisy devices.

PACKAGE OUTLINE

SOT23-6

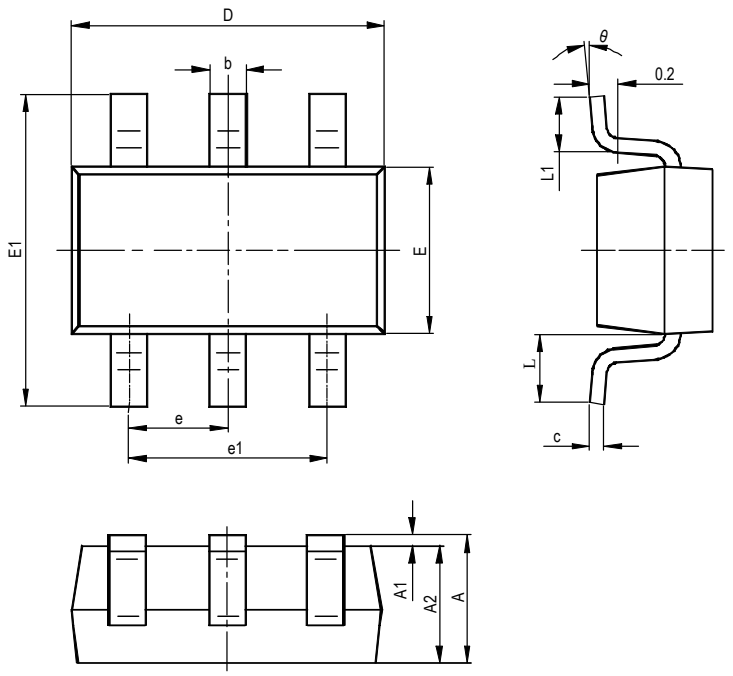

SYMBOL	MILLIMETERS		INCHES	
	MIN	MAX	MIN	MAX
A	1.050	1.250	0.041	0.049
A1	0.000	0.100	0.000	0.004
A2	1.050	1.150	0.041	0.045
b	0.300	0.400	0.012	0.016
c	0.100	0.200	0.004	0.008
D	2.820	3.020	0.111	0.119
E	1.500	1.700	0.059	0.067
E1	2.650	2.950	0.104	0.116
e	0.950TYP		0.037TYP	
e1	1.800	2.000	0.071	0.079
L	0.700REF		0.028REF	
L1	0.300	0.600	0.012	0.024
θ	0°	8°	0°	8°