White LED Step-Up Converter in SC70 and ThinSOT

FEATURES

Inherently Matched LED Current
High Efficiency: 84% Typical
Drives Up to Four LEDs from a 3.2V Supply
Drives Up to Six LEDs from a 5V Supply
36V Rugged Bipolar Switch
Fast 1.2MHz Switching Frequency
Uses Tiny 1mm Tall Inductors
Requires Only 0.22μF Output Capacitor
Low Profile SC70 and ThinSOT™ Packaging

APPLICATIONS

Cellular Phones
PDAs, Handheld Computers
Digital Cameras
MP3 Players
GPS Receivers

DESCRIPTION

The ZCC1937 is a step-up DC/DC converter specifically designed to drive white LEDs with a constant current. The device can drive two, three or four LEDs in series from a Li-Ion cell. Series connection of the LEDs provides identical LED currents resulting in uniform brightness and eliminating the need for ballast resistors. The ZCC1937 switches at 1.3MHz, allowing the use of tiny external components. The output capacitor can be as small as 0.22μF, saving space and cost versus alternative solu-tions. A low 95mV feedback voltage minimizes power loss in the current setting resistor for better efficiency.

The zcc1937 is available in low profile SC70 and ThinSOT packages.

TYPICAL APPLICATION

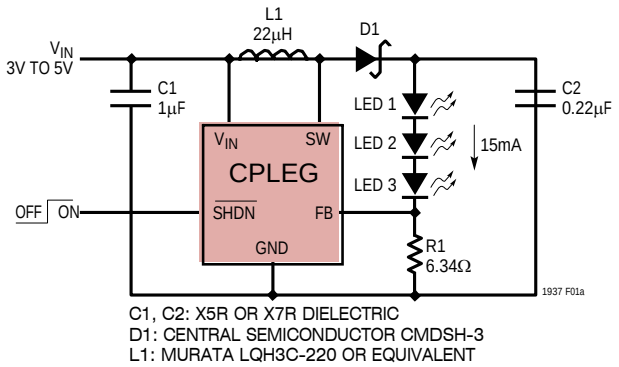

Figure 1. Li-Ion Powered Driver for Three White LEDs

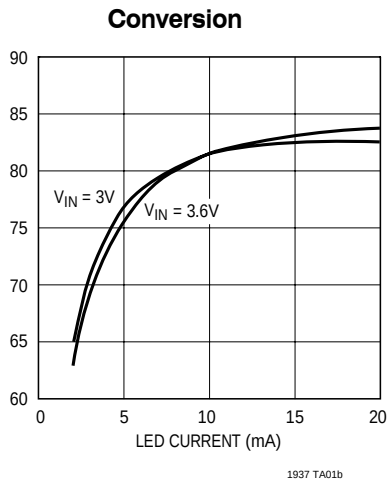

ABSOLUTE MAXIMUM RATINGS (Note 1)

Input Voltage (V_{IN}) 10V
SW Voltage 36V
FB Voltage 10V
SHDN Voltage 10V

Extended Commercial
Operating Temperature Range (Note 2) ... –40°C to 85°C
Maximum Junction Temperature ..... 125°C
Storage Temperature Range ..... –65°C to 150°C
Lead Temperature (Soldering, 10 sec) ..... 300°C

1. PACKAGE/ORDER InFORWATION

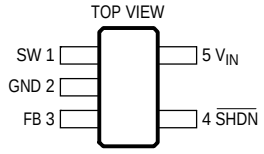

S5 PACKAGE
5-LEAD PLASTIC TSOT-23

T_{JMAX} = 125°C, θ_{JA} = 256°C/W IN FREE AIR
θ_{JA} = 120°C ON BOARD OVER GROUND PLANE

ORDER PART NUMBER	S5 PART MARKING
ZCC1937ES5	CPLEG

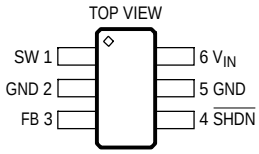

SC6 PACKAGE
6-LEAD PLASTIC SC70

T_{JMAX} = 125°C, θ_{JA} = 256°C/W IN FREE AIR
θ_{JA} = 150°C ON BOARD OVER GROUND PLANE

ORDER PART NUMBER	SC6 PART MARKING
ZCC1937ESC6	LAAB

Consult ZCC Marketing for parts specified with wider operating temperature ranges.

ELECTRICAL CHARACTERISTICS T_A = 25°C, V_{IN} = 3V, $V_{\overline{SHDN}}$ = 3V, unless otherwise noted.

PARAMETER	CONDITIONS	MIN	TYP	MAX	UNITS
Minimum Operating Voltage		2.5			V
Maximum Operating Voltage				10	V
Feedback Voltage	I_{SW} = 100mA, Duty Cycle = 66%	86	95	104	mV
FB Pin Bias Current		10	45	100	nA
Supply Current	 $\overline{SHDN}$ = 0V		1.9 0.1	2.5 1.0	mA µA
Switching Frequency		0.9	1.3	1.7	MHz
Maximum Duty Cycle		85	90		%
Switch Current Limit			320		mA
Switch V_{CESAT}	I_{SW} = 250mA		350		mV
Switch Leakage Current	V_{SW} = 5V		0.01	5	µA
$\overline{SHDN}$ Voltage High		1.5			V
$\overline{SHDN}$ Voltage Low				0.4	V
$\overline{SHDN}$ Pin Bias Current			65		µA

Note 1: Absolute Maximum Ratings are those values beyond which the life of the device may be impaired.

Note 2: The ZCC1937E is guaranteed to meet specifications from 0°C to 70°C. Specifications over the –40°C to 85°C operating temperature range are assured by design, characterization and correlation with statistical process controls.

TYPICAL PERFORMANCE CHARACTERISTICS

Quiescent Current

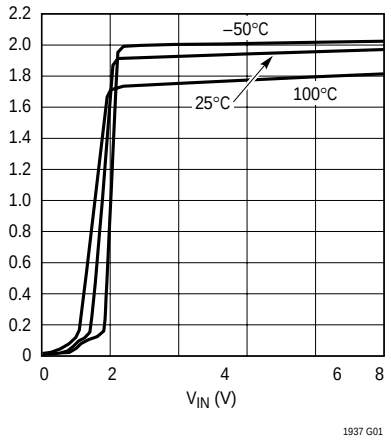

$\overline{SHDN}$ Pin Bias Current

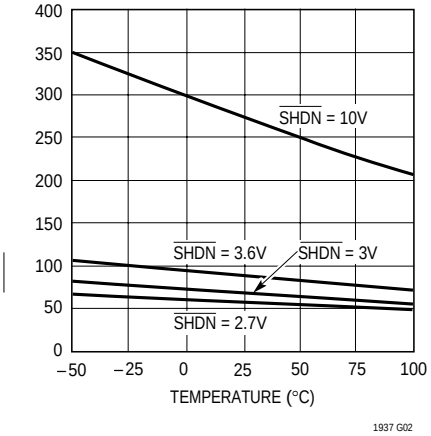

Switching Frequency

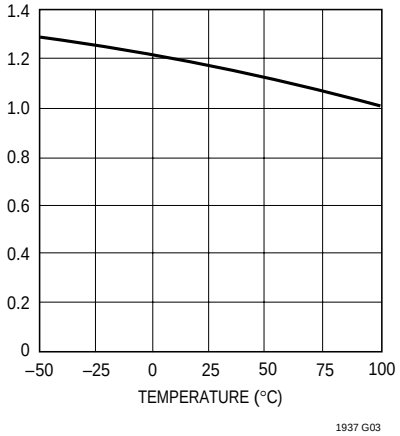

Feedback Bias Current

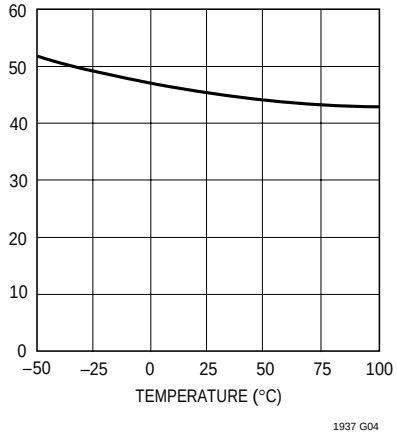

Efficiency vs Temperature

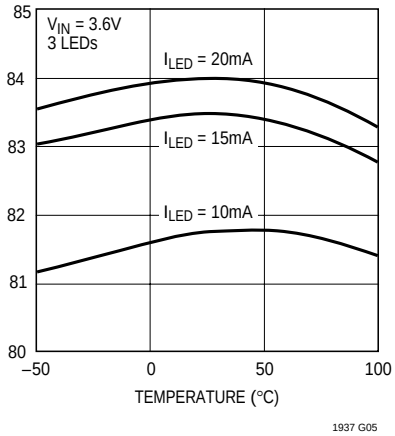

Current Limit vs Duty Cycle

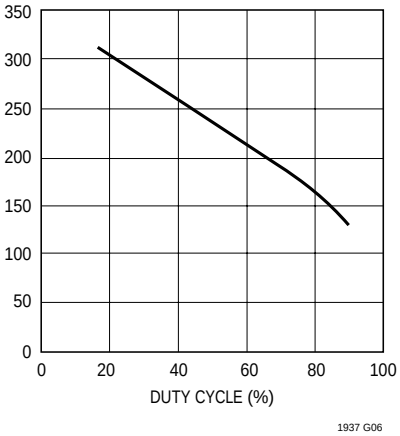

PINFU CTIONS

SW (Pin 1): Switch Pin. Connect inductor/diode here. Minimize trace area at this pin to reduce EMI.

GND (Pin 2): Ground Pin. Connect directly to local ground plane.

FB (Pin 3): Feedback Pin. Reference voltage is 95mV. Connect cathode of lowest LED and resistor here. Calculate resistor value according to the formula:

$R_{FB} = 95mV/I_{LED}$

$\overline{SHDN}$ (Pin 4): Shutdown Pin. Connect to 1.5V or higher to enable device; 0.4V or less to disable device.

GND (Pin 5, SC70 Package): Ground Pin. Connect to Pin 2 and to local ground plane

V_{IN} (Pin 5/Pin 6 SC70 Package): Input Supply Pin. Must be locally bypassed.

BLOCK DIAGRA

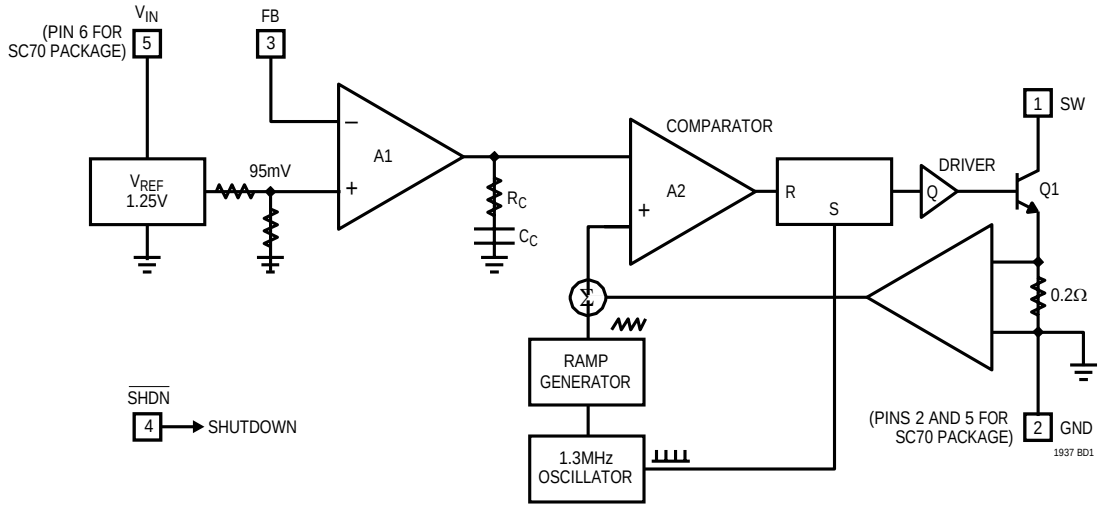

Figure 2. ZCC1937 **Block Diagram**

OPERATION

The ZCC1937 uses a constant frequency, current mode control scheme to provide excellent line and load regula- tion. Operation can be best understood by referring to the block diagram in Figure 2. At the start of each oscillator cycle, the SR latch is set, which turns on the power switch Q1. A voltage proportional to the switch current is added to a stabilizing ramp and the resulting sum is fed into the positive terminal of the PWM comparator A2. When this voltage exceeds the level at the negative input of A2, the SR latch is reset turning off the power switch. The level at the negative input of A2 is set by the error amplifier A1, and is simply an amplified version of the difference between the feedback voltage and the reference voltage of 95mV. In this manner, the error amplifier sets the correct peak current level to keep the output in regulation. If the error amplifier's output increases, more current is delivered to the output; if it decreases, less current is delivered.

Minimum Output Current

The ZCC1937 can regulate three series LEDs connected a low output currents, down to approximately 4mA from a 4.2V supply, without pulse skipping, using the same external components as specified for 15mA operation. As current is further reduced, the device will begin skipping pulses. This will result in some low frequency ripple, although the LED current remains regulated on an average basis down to zero. The photo in Figure 3 details circuit operation driving three white LEDs at a 4mA load. Peak inductor current is less than 50mA and the regulator operates in discontinuous mode, meaning the inductor current reaches zero during the discharge phase. After the inductor current reaches zero, the switch pin exhibits ringing due to the LC tank circuit formed by the inductor in combination with switch and diode capacitance. This ringing is not harmful; far less spectral energy is contained in the ringing than in the switch transitions. The ringing can be damped by application of a 300Ω resistor across the inductor, although this will degrade efficiency.

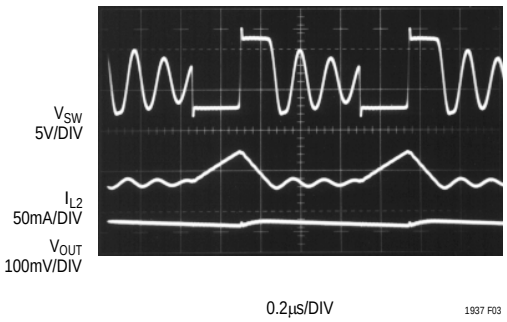

APPLICATIONS INFORMATION

Inductor Selection

A 22µH inductor is recommended for most ZCC1937 applications. Although small size and high efficiency are major concerns, the inductor should have low core losses at 1.3MHz and low DCR (copper wire resistance). Some inductors in this category with small size are listed in Table 1. The efficiency comparison of different inductors is shown in Figure 4.

Table 1. Recommended Inductors

PART NUMBER	DCR (Ω)	CURRENT RATING (mA)	MANUFACTURER
LQH3C220	0.71	250	Murata 814-237-1431 www.murata.com
ELJPC220KF	4.0	160	Panasonic 714-373-7334 www.panasonic.com
CDRH3D16-220	0.53	350	Sumida 847-956-0666 www.Sumida.com
LB2012B220M	1.7	75	Taiyo Yuden 408-573-4150 www.t-yuden.com
LEM2520-220	5.5	125	Taiyo Yuden 408-573-4150 www.t-yuden.com

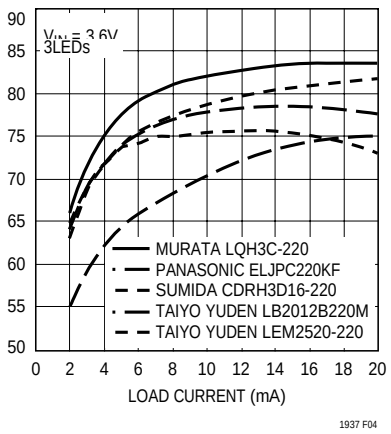

Figure 4. Efficiency Comparison of Different Inductors

Capacitor Selection

The small size of ceramic capacitors makes them ideal for ZCC1937 applications. X5R and X7R types are recommended because they retain their capacitance over wider voltage and temperature ranges than other types such as Y5V or Z5U. A 1µF input capacitor and a 0.22µF output capacitor are sufficient for most ZCC1937 applications.

Table 2. Recommended Ceramic Capacitor Manufacturers

MANUFACTURER	PHONE	URL
Taiyo Yuden	408-573-4150	www.t-yuden.com
AVX	843-448-9411	www.avxcorp.com
Murata	814-237-1431	www.murata.com
Kemet	408-986-0424	www.kemet.com

Diode Selection

Schottky diodes, with their low forward voltage drop and fast reverse recovery, are the ideal choices for ZCC1937 applications. The forward voltage drop of a Schottky diode represents the conduction losses in the diode, while the diode capacitance (C_T or C_D) represents the switching losses. For diode selection, both forward voltage drop and diode capacitance need to be considered. Schottky diodes with higher current ratings usually have lower forward voltage drop and larger diode capacitance, which can cause significant switching losses at the 1.3MHz switch- ing frequency of the ZCC1937. A Schottky diode rated at 100mA to 200mA is sufficient for most ZCC1937 applica- tions. Some recommended Schottky diodes are listed in Table 3.

Table 3. Recommended Schottky Diodes

PART NUMBER	FORWARD CURRENT (mA)	VOLTAGE DROP (V)	DIODE CAPACITANCE (pF)	MANUFACTURER
CMDSH-3	100	0.58 at 100mA	7.0 at 10V	Central 631-435-1110 www.centralsemi.com
CMDSH2-3	200	0.49 at 200mA	15 at 10V	Central 631-435-1110 www.centralsemi.com
BAT54	200	0.53 at 100mA	10 at 25V	Zetex 631-543-7100 www.zetex.com

APPLICATIONS INFORMATION

LED Current Control

The LED current is controlled by the feedback resistor (R1 in Figure 1). The feedback reference is 95mV. The LED current is 95mV/R1. In order to have accurate LED current, precision resistors are preferred (1% is recommended). The formula and table for R1 selection are shown below.

$$R1 = 95mV/I_{LED} \quad (1)$$

Table 4. R1 Resistor Value Selection

I_{LED} (mA)	R1 (Ω)
5	19.1
10	9.53
12	7.87
15	6.34
20	4.75

Open-Circuit Protection

In the cases of output open circuit, when the LEDs are disconnected from the circuit or the LEDs fail, the feed-back voltage will be zero. The ZCC1937 will then switch ata high duty cycle resulting in a high output voltage, whichmay cause the SW pin voltage to exceed its maximum 36V rating. A zener diode can be used at the output to limit the voltage on the SW pin (Figure 5). The zener voltage should be larger than the maximum forward voltage of the LED string. The current rating of the zener should be larger than 0.1mA.

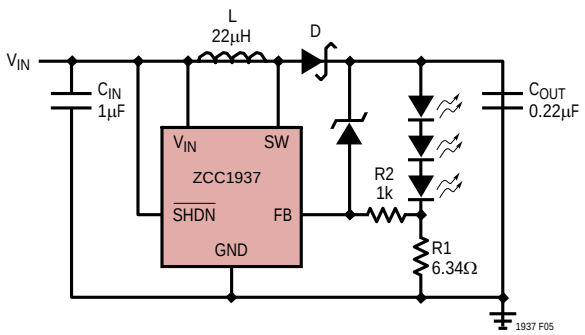

Figure 5. LED Driver with Open-Circuit Protection

Dimming Control

There are four different types of dimming control circuits:

1. Using a PWM Signal to $\overline{SHDN}$ Pin

With the PWM signal applied to the $\overline{SHDN}$ pin, the ZCC1937 is turned on or off by the PWM signal. The LEDs operate at either zero or full current. The average LED current increases proportionally with the duty cycle of the PWM signal. A 0% duty cycle will turn off the ZCC1937 and corresponds to zero LED current. A 100% duty cycle corresponds to full current. The typical frequency range of the PWM signal is 1kHz to 10kHz. The magnitude of the PWM signal should be higher than the minimum $\overline{SHDN}$ voltage high. The switching waveforms of the SHDN pin PWM control are shown in Figures 6a and 6b.

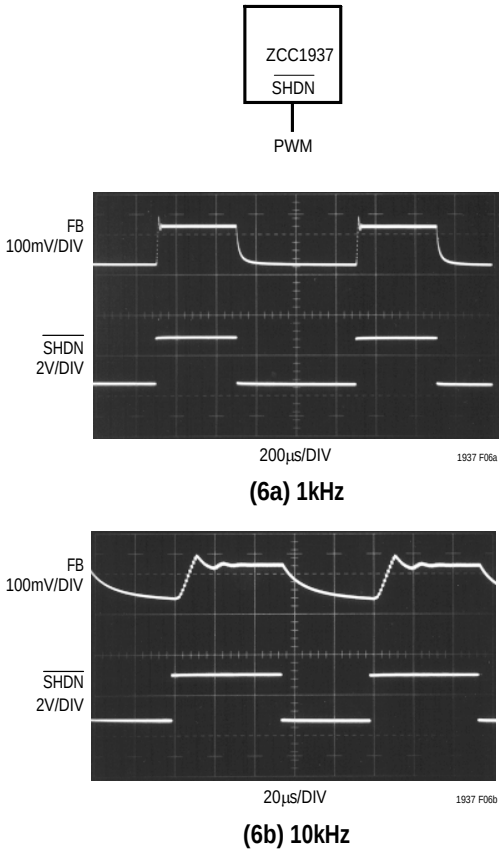

Figure 6. PWM Dimming Control Using the $\overline{SHDN}$ Pin

APPLICATIONS INFORMATION

2. Using a DC Voltage

For some applications, the preferred method of brightness control is a variable DC voltage to adjust the LED current. The dimming control using a DC voltage is shown in Figure 7. As the DC voltage increases, the voltage drop on R2 increases and the voltage drop on R1 decreases. Thus, the LED current decreases. The selection of R2 and R3 will make the current from the variable DC source much smaller than the LED current and much larger than the FB pin bias current. For V_{DC} range from 0V to 2V, the selectionof resistors in Figure 7 gives dimming control of LEDcurrent from 0mA to 15mA.

3. Using a Filtered PWM Signal

The filtered PWM signal can be considered as an adjust-able DC voltage. It can be used to replace the variable DC voltage source in dimming control. The circuit is shown in Figure 8.

4. Using a Logic Signal

For applications that need to adjust the LED current in discrete steps, a logic signal can be used as shown in Figure 9. R1 sets the minimum LED current (when the NMOS is off). R_{INC} sets how much the LED current increases when the NMOS is turned on. The selection of R1 and R_{INC} follows formula (1) and Table 4.

Start-up and Inrush Current

To achieve minimum start-up delay, no internal soft-start circuit is included in ZCC1937. When first turned on without an external soft-start circuit, inrush current is about 200mA as shown in Figure 10. If soft-start is desired, the recom- mended circuit and the waveforms are shown in Figure 11.If both soft-start and dimming are used, a 10kHz PWM signal on SHDN is not recommended. Use a lower fre- quency or implement dimming through the FB pin as shown in Figures 7, 8 or 9.

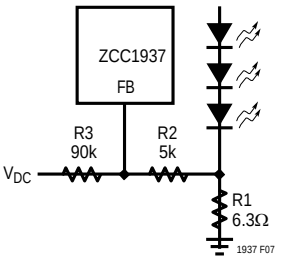

Figure 7. Dimming Control Using a DC Voltage

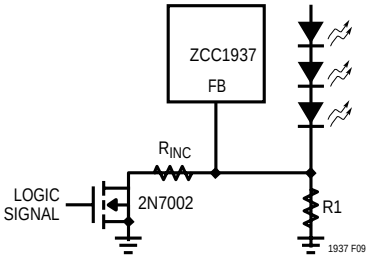

Figure 9. Dimming Control Using a Logic Signal

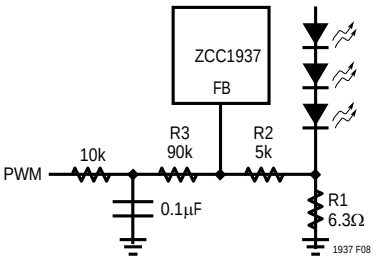

Figure 8. Dimming Control Using a Filtered PWM Signal

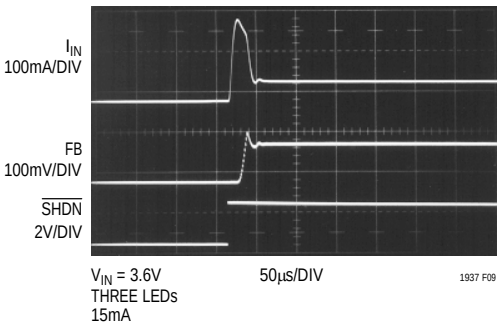

Figure 10. Start-Up Waveforms Without Soft-Startup Circuit

APPLICATIONS INFORMATION

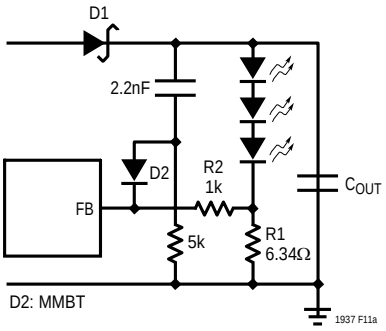

(11a) Recommended Soft-Startup Circuit

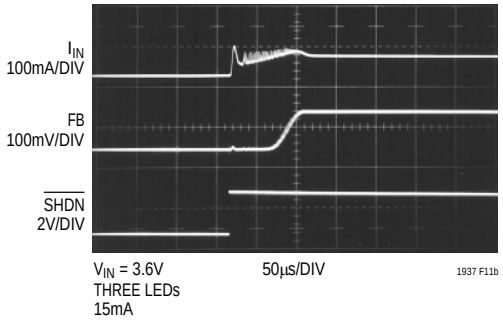

(11b) Soft-Startup Waveforms

Figure 11. Recommended Soft-Startup Circuit and Waveforms

Board Layout Consideration

As with all switching regulators, careful attention must be paid to the PCB board layout and component placement. To maximize efficiency, switch rise and fall times are made as short as possible. To prevent electromagnetic interference (EMI) problems, proper layout of the high frequency switching path is essential. The voltage signal of the SW pin has sharp rise and fall edges. Minimize the length and area of all traces connected to the SW pin and always use a ground plane under the switching regulator to minimize interplane coupling. In addition, the ground connection for the feedback resistor R1 should be tied directly to the GND pin and not shared with any other component, ensuring a clean, noise-free connection. Recommended component placement is shown in Figure 12.

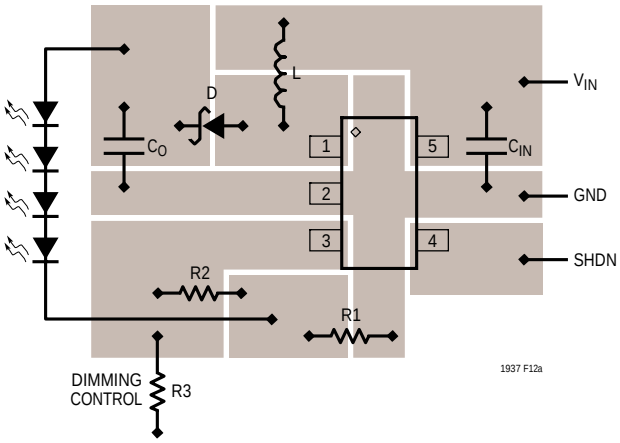

(SOT-23 Package)

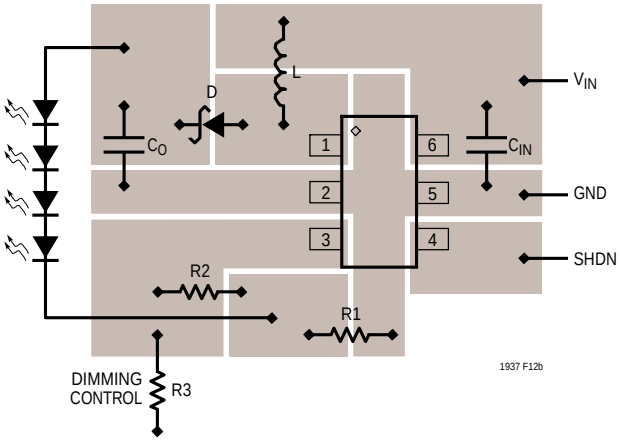

(SC70 Package)

Figure 12. Recommended Component Placement

TYPICAL APPLICATIONS

Li-Ion to Two White LEDs

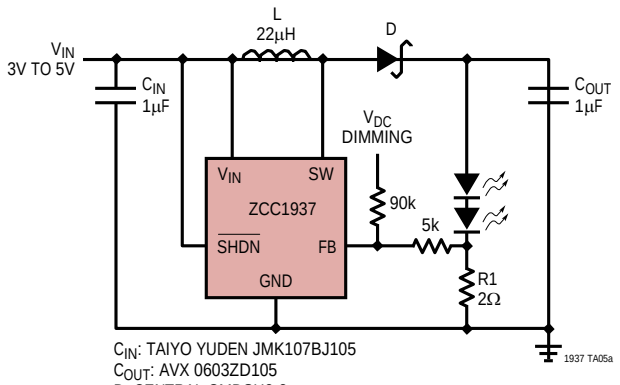

C_{IN}: TAIYO YUDEN JMK107BJ105
C_{OUT}: AVX 0603ZD105
D: CENTRAL CMDSH2-3
L: MURATA LQH3C220

Two LED Efficiency

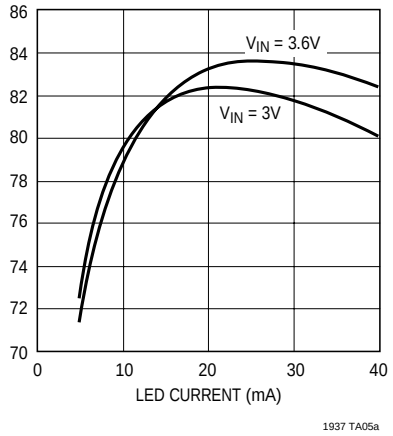

Li-Ion to Three White LEDs

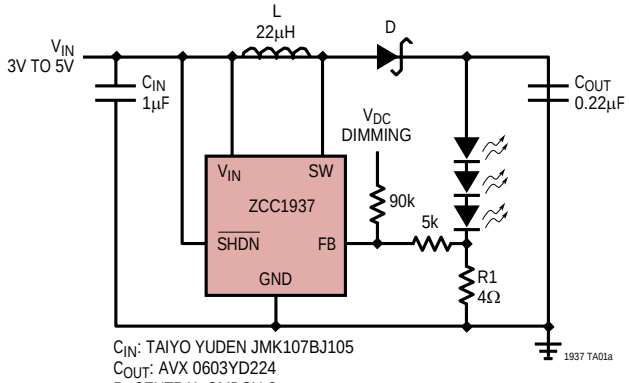

C_{IN}: TAIYO YUDEN JMK107BJ105
C_{OUT}: AVX 0603YD224
D: CENTRAL CMDSH-3
L: MURATA LQH3C220

Three LED Efficiency

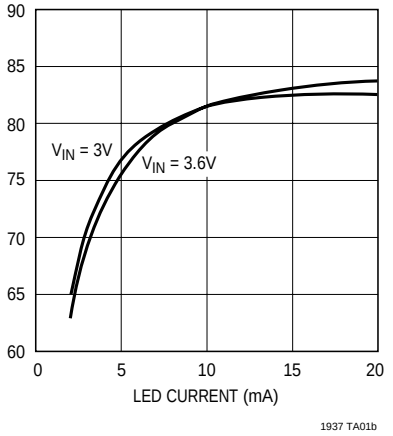

TYPICAL APPLICATIONS

Li-Ion to Five White LEDs

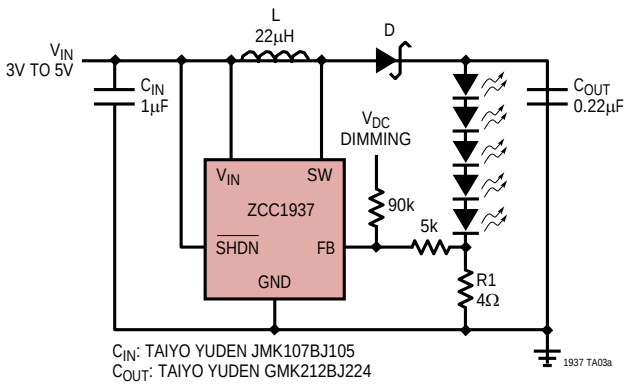

C_{IN}: TAIYO YUDEN JMK107BJ105
C_{OUT}: TAIYO YUDEN GMK212BJ224
D: CENTRAL CMDSH-3
L: MURATA LQH3C220

Five LED Efficiency

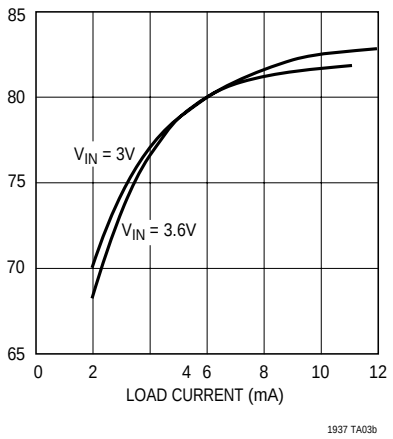

5V to Seven White LEDs

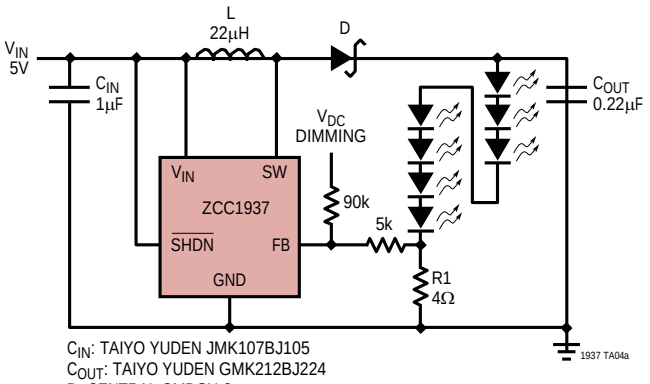

C_{IN}: TAIYO YUDEN JMK107BJ105
C_{OUT}: TAIYO YUDEN GMK212BJ224
D: CENTRAL CMDSH-3
L: MURATA LQH3C220

Seven LED Efficiency

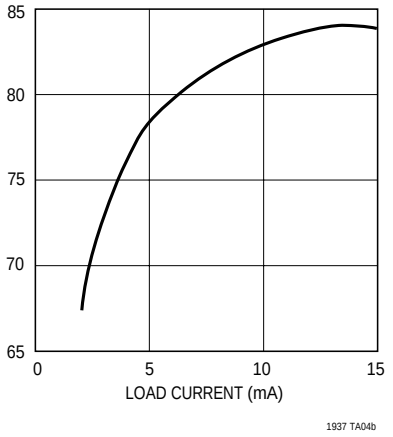

PACKAGE DESCRIPTION

S5 Package
5-Lead Plastic TSOT-23
(Reference LTC DWG # 05-08-1635)

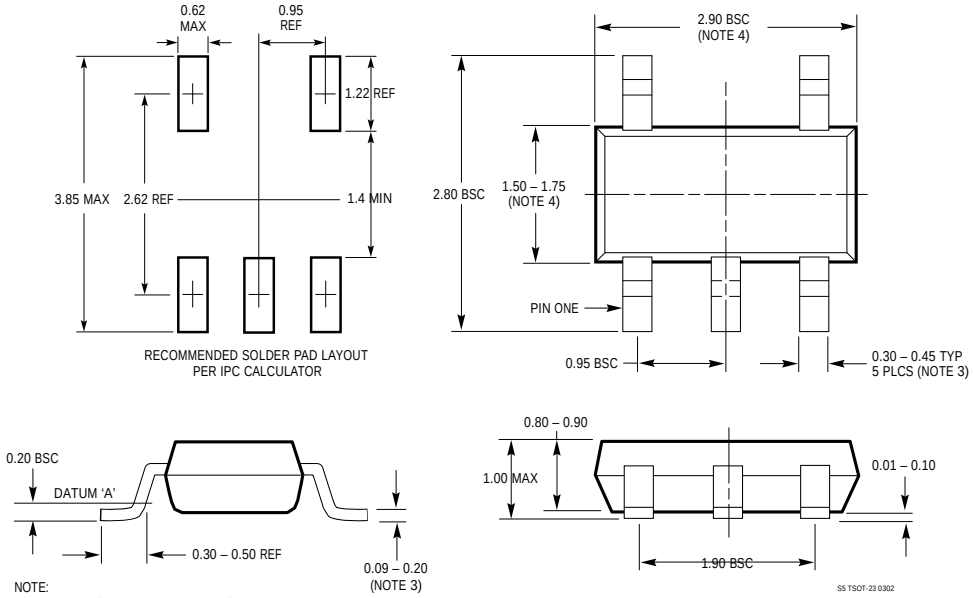

NOTE:
1. DIMENSIONS ARE IN MILLIMETERS
2. DRAWING NOT TO SCALE
3. DIMENSIONS ARE INCLUSIVE OF PLATING
4. DIMENSIONS ARE EXCLUSIVE OF MOLD FLASH AND METAL BURR
5. MOLD FLASH SHALL NOT EXCEED 0.254mm
6. JEDEC PACKAGE REFERENCE IS MO-193

SC6 Package
6-Lead Plastic SC70
(Reference LTC DWG # 05-08-1638)

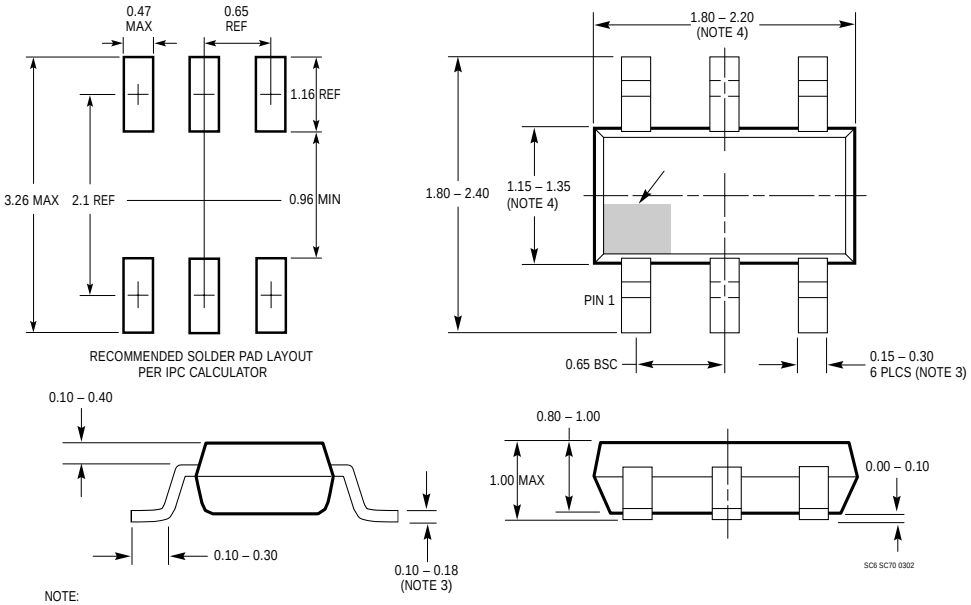

NOTE:
1. DIMENSIONS ARE IN MILLIMETERS
2. DRAWING NOT TO SCALE
3. DIMENSIONS ARE INCLUSIVE OF PLATING
4. DIMENSIONS ARE EXCLUSIVE OF MOLD FLASH AND METAL BURR
5. MOLD FLASH SHALL NOT EXCEED 0.254mm
6. DETAILS OF THE PIN 1 INDENTIFIER ARE OPTIONAL, BUT MUST BE LOCATED WITHIN THE INDEX AREA
7. EIAJ PACKAGE REFERENCE IS EIAJ SC-70

TYPICAL APPLICATION

Li-Ion to Four White LEDs

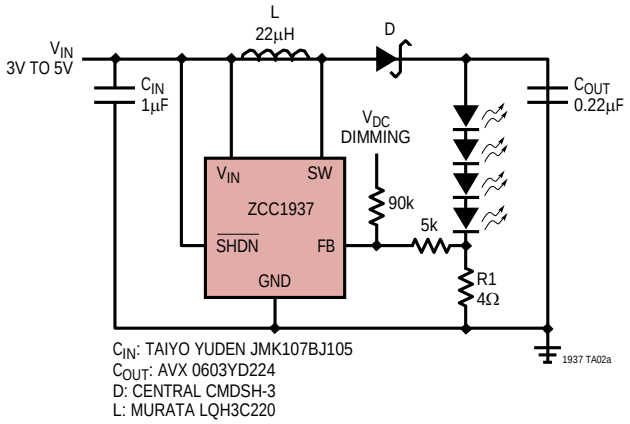

Four LED Efficiency

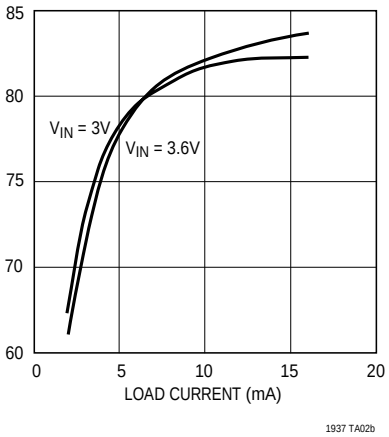
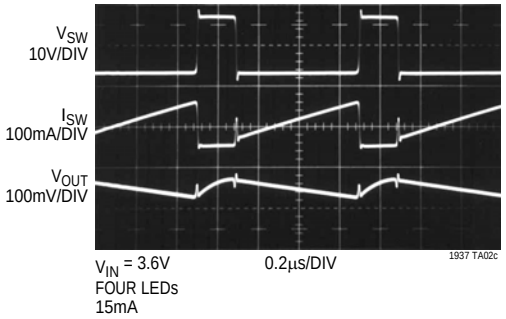
Switching Waveforms