30V 1.2A 1.4MHz PWM SYN Step-Down Regulator

Features

- Wide 4V to 30V Operating Input Range
- 1.2A Continuous Output Current
- 1.4MHz Switching Frequency
- Short Protection with Hiccup-Mode
- Built-in Over Current Limit
- Built-in Over Voltage Protection
- Force-PWM Mode
- Internal Soft-Start
- 200mΩ/150mΩ Low RDS(ON) Internal Power MOSFETs
- Output Adjustable from 0.8V
- No Schottky Diode Required
- Integrated internal compensation
- Thermal Shutdown
- Available in SOT23-6 Package
- -40°C to +85°C Temperature Range

Applications

- CCTV Camera
- Flat-Panel Television and Monitor
- Battery Charger
- Distributed Power Systems

General Description

The ZCC9310 is a high frequency, synchronous, rectified, step-down, switch-mode converter with internal power MOSFETs. It offers a very compact solution to achieve a 1.5A peak output current over a wide input supply range, with excellent load and line regulation.

The ZCC9310 requires a minimal number of readily available, external components and is available in a space saving SOT23-6 package.

Typical Application Circuit

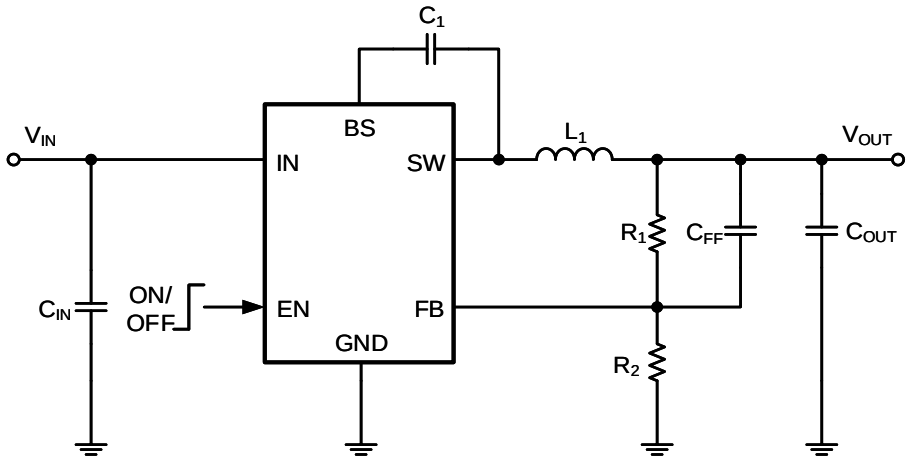

Basic Application Circuit

30V 1.2A 1.4MHz PWM SYN Step-Down Regulator

Pin Description

Pin Configuration

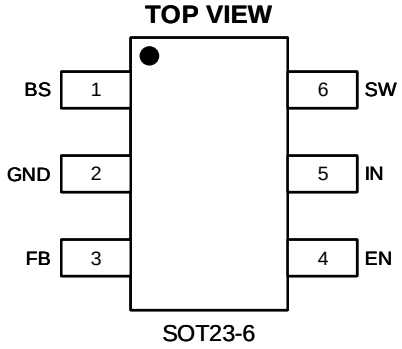

Top Marking: GBYLL (device code: GB, Y=year code, LL= lot number code)

Pin Description

Pin	Name	Function
1	BS	Bootstrap. A capacitor connected between SW and BS pins is required to form a floating supply across the high-side switch driver.
2	GND	GROUND Pin
3	FB	Adjustable Version Feedback input. Connect FB to the center point of the external resistor divider
4	EN	Drive this pin to a logic-high to enable the IC. Drive to a logic-low to disable the IC and enter micro-power shutdown mode.
5	IN	Power Supply Pin
6	SW	Switching Pin

Order Information

Marking	Part No.	Model	Description	Package	MOQ
GBYLL	70301500	ZCC9310	ZCC9310 PWM Buck, 4-30V, 1.2A, 1.4MHz, VFB 0.8V, SOT23-6	SOT23-6	3000PCS

30V 1.2A 1.4MHz PWM SYN Step-Down Regulator

Absolute Maximum Ratings (1) (2)

V_{IN}, EN, Voltage ……... -0.3V to 36V
V_{FB} Voltages ...…… -0.3 to 6V
Operating Temperature Range …...-40°C to +85°C
Lead Temperature (Soldering, 10s) ……... +300°C
ESD (Human Body Made) HMB…….2KV
V_{SW} Voltage ...……...…...…. -0.3V to (V_{IN}+0.5V)
V_{BS} Voltage …...……..... (Vsw-0.3) to (Vsw+5V)
Storage Temperature Range ……. -65°C to 150°C
Junction Temperature…….……...….…+125°C
ESD (Machine Made) MM……... 200V

Note1: Exceeding these ratings may damage the device.

Note2: The device is not guaranteed to function outside of its operating conditions.

Thermal Resistance

SOT236 θ_{JA} …….…..…….…….....105°C/W
SOT236 θ_{JC} …….……...……...…….....35°C/W

Electrical Characteristics (3) (4)

(V_{IN}=12V, V_{OUT}=5V, T_A = 25°C, unless otherwise noted.)

Parameter	Test Conditions	Min	Typ	Max	Unit
Input Voltage Range		4		30	V
Supply Current in Operation	V_{EN}=3.0V, V_{FB}=1.1V		0.4	0.6	mA
Supply Current in Shutdown	V_{EN} =0 or EN = GND			4	μA
Regulated Feedback Voltage	T_A = 25°C, 4V≤VIN ≤18V	0.791	0.807	0.823	V
High-Side Switch On-Resistance			200		m Ω
Low-Side Switch On-Resistance			150		m Ω
High-Side Switch Leakage Current	V_{EN}=0V, V_{SW}=12V			1	uA
Upper Switch Current Limit	Minimum Duty Cycle		1.5		A
Oscillation Frequency		1.2	1.4	1.6	MHz
Maximum Duty Cycle	V_{FB}=0.807V	90	95		%
Minimum On-Time			60		nS
Minimum Off-Time			140		nS
EN up Threshold	V_{EN}-Rising	1.05	1.15	1.25	V
EN Threshold Hysteresis			140		mV
Soft Start				1.2	mS
Thermal Shutdown			160		°C
Thermal Hysteresis			20		°C

Note (3): MOSFET on-resistance specifications are guaranteed by correlation to wafer level measurements.

Note (4): Thermal shutdown specifications are guaranteed by correlation to the design and characteristics analysis.

30V 1.2A 1.4MHz PWM SYN Step-Down Regulator

Typical Performance Characteristics (5) (6)

Note (5): Performance waveforms are tested on the evaluation board.

Note (6): V_{IN} =12V, V_{OUT}=3.3V, T_A = +25ºC, unless otherwise noted.

Efficiency vs Load Current

V_{OUT} = 3.3V

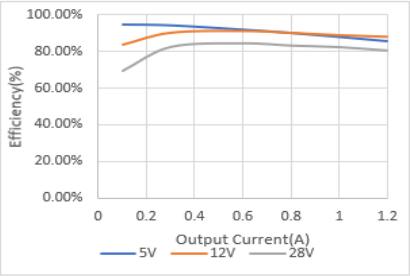

Load Regulation

V_{OUT} = 3.3V

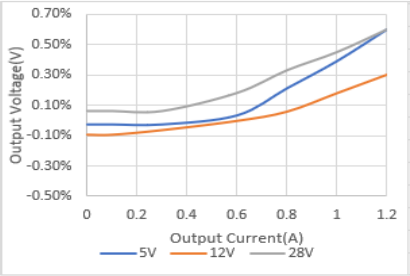

Line Regulation

V_{OUT} = 3.3V

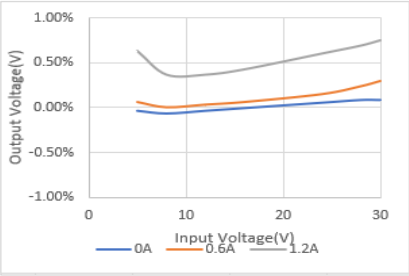

Output Ripple Voltage

V_{IN}=12V, V_{OUT}=3.3V, I_{OUT}=0A

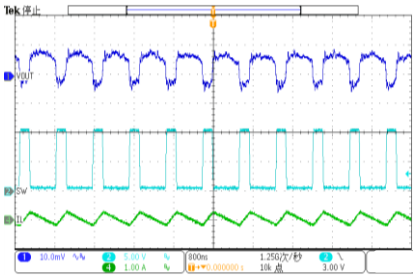

Output Ripple Voltage

V_{IN}=12V, V_{OUT}=3.3V, I_{OUT}=0.6A

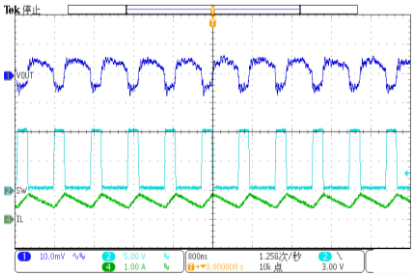

Output Ripple Voltage

V_{IN}=12V, V_{OUT}=3.3V, I_{OUT}=1.2A

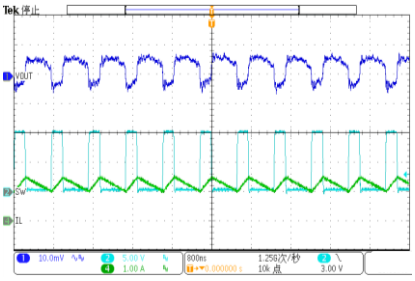

Loop Response

V_{IN} = 12V, V_{OUT} =3.3V, $I_{INDUCTOR}$ =0.6A-1.2A

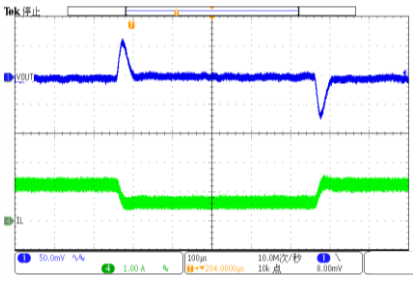

Hiccup with Output Short

V_{IN} = 12V, V_{OUT} = 3.3V

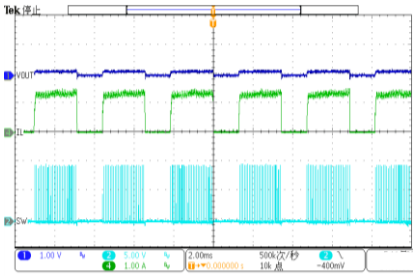

Short Circuit Entry

V_{IN} = 12V, V_{OUT} = 3.3V

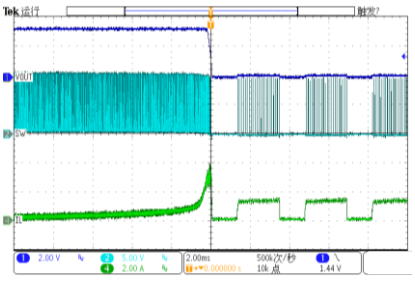

30V 1.2A 1.4MHz PWM SYN Step-Down Regulator

Short Circuit Recovery

V_{IN} = 12V, V_{OUT} = 3.3V

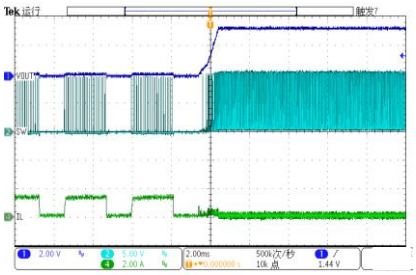

Enable Startup at No Load

V_{IN} = 12V, V_{OUT} = 3.3V, I_{OUT} = 0A

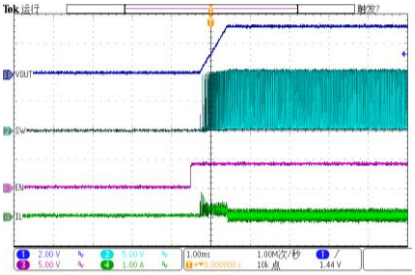

Enable Shutdown at No Load

V_{IN} = 12V, V_{OUT} = 3.3V, I_{OUT} = 0A

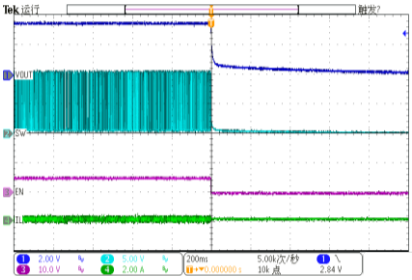

Enable Startup at Full Load

V_{IN} = 12V, V_{OUT} = 3.3V, I_{OUT} = 1.2A

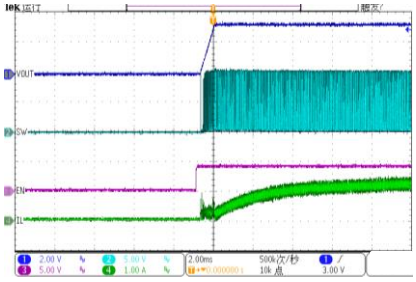

Enable Shutdown at Full Load

V_{IN} = 12V, V_{OUT} = 3.3V, I_{OUT} = 1.2A

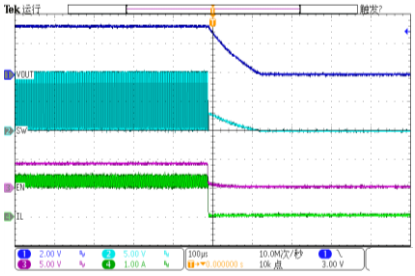

Power Up at No Load

V_{IN} = 12V, V_{OUT} = 3.3V, I_{OUT} = 0A

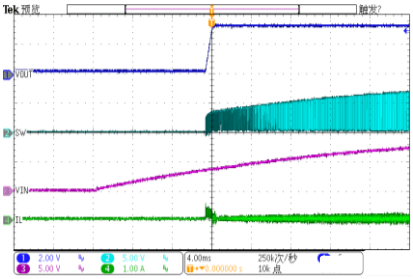

Power Up at No Load

V_{IN} = 12V, V_{OUT} = 3.3V, I_{OUT} = 1.2A

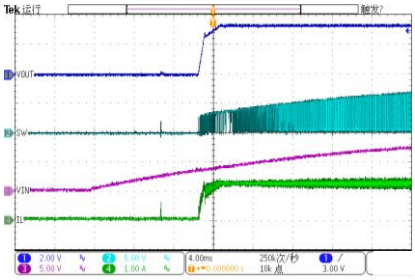

30V 1.2A 1.4MHz PWM SYN Step-Down Regulator

Functional Block Diagram

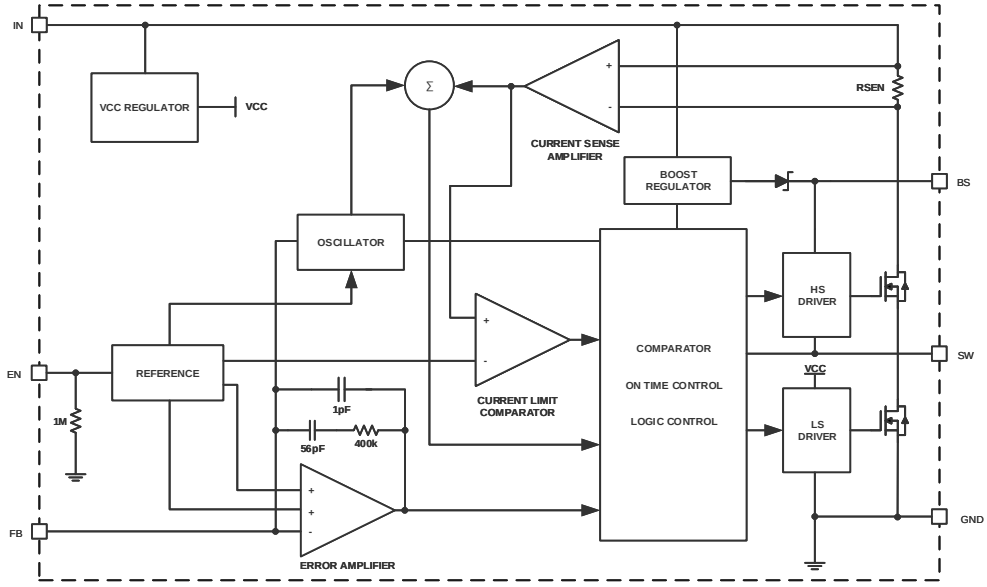

ZCC9310 Block Diagram

Functions Description

Internal Regulator

The ZCC9310 is a current mode step down DC/DC converter that provides excellent transient response with no extra external compensation components. This device contains an internal, low resistance, high voltage power MOSFET, and operates at a high 1.4MHz operating frequency to ensure a compact, high efficiency design with excellent AC and DC performance.

Error Amplifier

The error amplifier compares the FB pin voltage with the internal FB reference (VFB) and outputs a current proportional to the difference between the two. This output current is then used to charge or discharge the internal compensation network, which is used to control the power MOSFET current. The optimized internal compensation network minimizes the external component counts and simplifies the control loop design.

Internal Soft-Start

The soft-start is implemented to prevent the converter output voltage from overshooting during startup. When the chip starts, the internal circuitry generates a soft-start voltage (SS) ramping up from 0V to 0.807V. When it is lower than the internal reference (REF), SS overrides REF so the error amplifier uses SS as the reference. When SS is higher than REF, REF regains control. The SS time is internally max to 1.2ms.

Over Current Protection & Hiccup

The ZCC9310 has cycle-by-cycle over current limit when the inductor current peak value exceeds the set current limit threshold. Meanwhile, output voltage starts to drop until FB is below the Under-Voltage (UV) threshold, typically 25% below the reference. Once a UV is triggered, the ZCC9310 enters hiccup mode to periodically restart the part. This protection mode is especially useful when the output is dead-short to ground. The average short circuit

current is greatly reduced to alleviate the thermal issue and to protect the regulator. The ZCC9310 exits the hiccup mode once the over current condition is removed.

Startup and Shutdown

If both VIN and EN are higher than their appropriate thresholds, the chip starts. The reference block starts first, generating stable reference voltage and currents, and then the internal regulator is enabled. The regulator provides stable supply for the remaining circuitries. Three events can shut down the chip: EN low, VIN low and thermal shutdown. In the shutdown procedure, the signaling path is first blocked to avoid any fault triggering. The comp voltage and the internal supply rail are then pulled down. The floating driver is not subject to this shutdown command.

Applications Information

Setting the Output Voltage

ZCC9310 require an input capacitor, an output capacitor and an inductor. These components are critical to the performance of the device. ZCC9310 are internally compensated and do not require external components to achieve stable operation. The output voltage can be programmed by resistor divider.

$$V_{OUT} = V_{FB} \times \frac{R1 + R2}{R2}$$

V_{OUT}	R1	R2	$L1_{MIN}$	$L1_{TYP}$	$L1_{MAX}$	C_{IN}	C_{OUT}
1V	2.5KΩ	10KΩ	2.2μH	2.2μH	4.7μH	20-47uF	20-68uF
1.05V	3.13KΩ	10KΩ	2.2μH	2.2μH	4.7μH	20-47uF	20-68uF
1.2V	5KΩ	10KΩ	2.2μH	2.2μH	4.7μH	20-47uF	20-68uF
1.5V	8.75KΩ	10KΩ	2.2μH	2.2μH	4.7μH	20-47uF	20-68uF
3.3V	31.25KΩ	10KΩ	3.3μH	3.3μH	4.7μH	20-47uF	20-68uF
5.0V	52.5KΩ	10KΩ	3.3μH	4.7μH	4.7μH	20-47uF	20-68uF

Selecting the Inductor

The recommended inductor values are shown in the Application Diagram. It is important to guarantee the inductor core does not saturate during any foreseeable operational situation. The inductor should be rated to handle the peak load current plus the ripple current: Care should be taken when reviewing the different saturation current ratings that are specified by different manufacturers. Saturation current ratings are typically specified at 25°C, so ratings at maximum ambient temperature of the application should be requested from the manufacturer.

$$L = \frac{V_{OUT} \times (V_{IN} - V_{OUT})}{V_{IN} \times \Delta I_L \times F_{OSC}}$$

Where ΔIL is the inductor ripple current. Choose inductor ripple current to be approximately 30% if the maximum load current. The maximum inductor peak current is:

$$I_{L(MAX)} = I_{LOAD} + \frac{\Delta I_L}{2}$$

30V 1.2A 1.4MHz PWM SYN Step-Down Regulator

Under light load conditions below 100mA, larger inductance is recommended for improved efficiency.

Selecting the Output Capacitor

Special attention should be paid when selecting these components. The DC bias of these capacitors can result in a capacitance value that falls below the minimum value given in the recommended capacitor specifications table.
The ceramic capacitor's actual capacitance can vary with temperature. The capacitor type X7R, which operates over a temperature range of −55°C to +125°C, will only vary the capacitance to within ±15%. The capacitor type X5R has a similar tolerance over a reduced temperature range of −55°C to +85°C. Many large value ceramic capacitors, larger than 1uF are manufactured with Z5U or Y5V temperature characteristics. Their capacitance can drop by more than 50% as the temperature varies from 25°C to 85°C. Therefore X5R or X7R is recommended over Z5U and Y5V in applications where the ambient temperature will change significantly above or below 25°C.
Tantalum capacitors are less desirable than ceramic for use as output capacitors because they are more expensive when comparing equivalent capacitance and voltage ratings in the 0.47uF to 44uF range. Another important consideration is that tantalum capacitors have higher ESR values than equivalent size ceramics. This means that while it may be possible to find a tantalum capacitor with an ESR value within the stable range, it would have to be larger in capacitance (which means bigger and more costly) than a ceramic capacitor with the same ESR value. It should also be noted that the ESR of a typical tantalum will increase about 2:1 as the temperature goes from 25°C down to −40°C, so some guard band must be allowed.

PC Board Layout Consideration

PCB layout is very important to achieve stable operation. It is highly recommended to duplicate EVB layout for optimum performance. If change is necessary, please follow these guidelines for reference.

1. Keep the path of switching current short and minimize the loop area formed by Input capacitor, high-side MOSFET and low-side MOSFET.
2. Bypass ceramic capacitors are suggested to be put close to the Vin Pin.
3. Ensure all feedback connections are short and direct. Place the feedback resistors and compensation components as close to the chip as possible.
4. VOUT, SW away from sensitive analog areas such as FB.
5. Connect IN, SW, and especially GND respectively to a large copper area to cool the chip to improve thermal performance and long-term reliability.

30V 1.2A 1.4MHz PWM SYN Step-Down Regulator

Package Description

SOT23-6

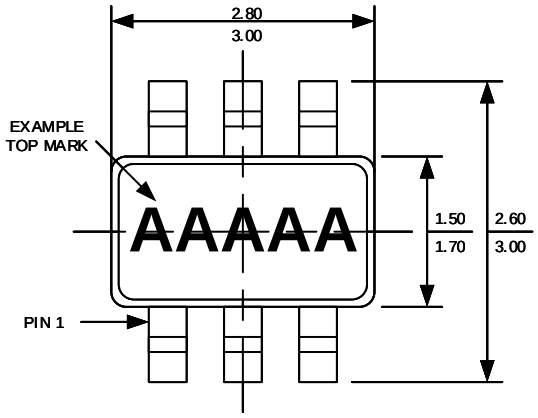

TOP VIEW

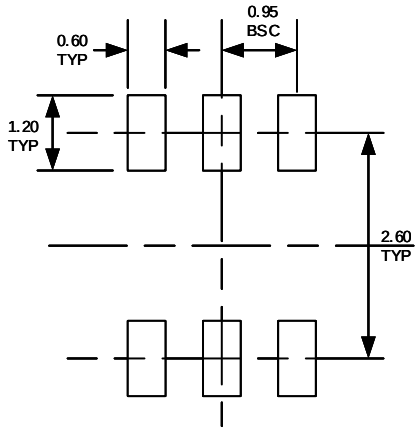

RECOMMENDED PAD LAYOUT

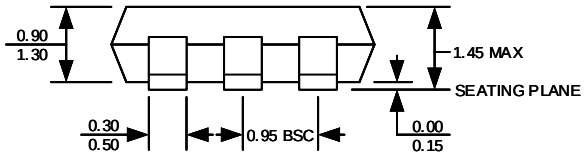

FRONT VIEW

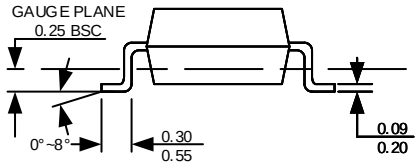

SIDE VIEW

NOTE:
1. CONTROL DIMENSION IS IN INCHES. DIMENSION IN BRACKET IS IN MILLIMETERS.
2. PACKAGE LENGTH DOES NOT INCLUDE MOLD FLASH, PROTRUSIONS OR GATE BURRS.
3. PACKAGE WIDTH DOES NOT INCLUDE INTERLEAD FLASH OR PROTRUSIONS.
4. LEAD COPLANARITY (BOTTOM OF LEADS AFTER FORMING) SHALL BE 0.004" INCHES MAX.
5. DRAWING CONFORMS TO JEDEC MS-012, VARIATION BA.
6. DRAWING IS NOT TO SCALE.